ALFA GTV/SPIDER (916)

All prices including tax, delivery costs are extra

Table Of Content

BODY 7
BODYPARTS 7
BUMPER/GRILLE/PANEL 8
CAR COVER 9
MIRROR 10
LIGHTING 11
DOOR SEALS 12
TRUNK RUBBER SEAL 13
HOOD 14
EMBLEMS 15
WIND DEFLECTOR 16
ENGINE 17
V-BELTS 17
1.8/2.0 TS 17
2.0 JTS 18
2.0 V6 Turbo 19
3.0 V6 20
3.0/3.2 V6 24V 21
FUEL SYSTEM 22
1.8/2.0 TS 22
FUEL PUMP 22
AIR FLOW METER 23
2.0 JTS 24
FUEL PUMP 24
2.0 V6 Turbo 25
FUEL PUMP 25
3.0 V6 26
FUEL PUMP 26
AIR FLOW METER 27
3.0/3.2 V6 24V 28
AIR FLOW METER 28
FUEL PUMP 29
ENGINE GASKETS 30
1.8/2.0 TS 30
GASKETS ENGINE 30
HEAD SET 31
FULL SET 32
HEAD SCREW SET 33
2.0 JTS 34
GASKETS ENGINE 34
HEAD SET 35
2.0 V6 Turbo 36
GASKETS ENGINE 36
HEAD SET 37
FULL SET 38

3.0 V6 39
GASKETS ENGINE 39
HEAD SET 40
FULL SET 41
3.0/3.2 V6 24V 42
GSKETS ENGINE 42
HEAD SET 43
FULL SET 44
HEAD SCREW SET 45
REINZ UNIVERSAL 46
COOLING SYSTEM 47
1.8/2.0 TS 47
RADIATOR 47
THERMOSTAT 48
WATERPUMP 49
2.0 JTS 50
RADIATOR 50
THERMOSTAT 51
WATERPUMP 52
2.0 V6 Turbo 53
RADIATOR 53
THERMOSTAT 54
WATERPUMP 55
3.0 V6 56
RADIATOR 56
THERMOSTAT 57
WATERPUMP 58
3.0/3.2 V6 24V 59
RADIATOR 59
THERMOSTAT 60
WATERPUMP 61
WATER OVERFLOW RESERVOIR 62
ENGINE MOUNT 63
1.8/2.0 TS 63
2.0 JTS 64
2.0 V6 Turbo 65
3.0 V6 66
3.0/3.2 V6 24V 67
VALVE GEAR 68
1.8/2.0 TS 68
CAMSHAFT 68
VALVE MECHANISM 69
TIMING BELT 70
2.0 JTS 71
CAMSHAFT 71
VALVE MECHANISM 72
TIMING BELT 73

2.0 V6 Turbo 74
CAMSHAFT 74
VALVE MECHANISM 75
TIMING BELT 76
3.0 V6 77
CAMSHAFT 77
VALVE MECHANISM 78
TIMING BELT 79
3.0/3.2 V6 24V 80
CAMSHAFT 80
VALVE MECHANISM 81
TIMING BELT 82
PISTONS/BEARINGS 83
3.0 V6 12V 83
FILTER 84
1.8/2.0 TS 84
2.0 JTS 85
2.0 V6 Turbo 86
3.0 V6 87
3.0/3.2 V6 24V 88
EXHAUST SYSTEM 89
EXHAUST SYSTEM 89
1.8/2.0 TS 89
2.0 JTS 90
2.0 V6 Turbo 91
3.0 V6 12V 92
3.0 V6 24V 93
3.2 V6 24V/GTA 94
OXYGEN SENSORS 95
1.8/2.0 TS 95
2.0 JTS 96
2.0 V6 Turbo 97
3.0 V6 12V 98
3.0 V6 24V 99
3.2 V6 24V/GTA 100
DRIVETRAIN 101
DRIVESHAFT 101
1.8/2.0 TS 101
2.0 JTS 102
2.0 V6 Turbo 103
3.0 V6 12V 104
3.0 V6 24V 105
3.2 V6 24V/GTA 106
CLUTCH 107
CLUTCH SET 1.8/2.0 TS 107
GUIDE BUSH f. SLEEVE BEARING 1.8/2.0 TS 108
CLUTCH SET 2.0 JTS 109

GUIDE BUSH f. SLEEVE BEARING 2.0 JTS 110
CLUTCH SET 2.0 V6 Turbo 111
GUIDE BUSH f. SLEEVE BEARING 2.0 V6 Turb 112
CLUTCH SET 3.0 V6 12V 113
CLUTCH SET 3.0 V6 24V 114
GUIDE BUSH f. SLEEVE BEARING 3.0 V6 115
GUIDE BUSH f. SLEEVE BEARING 3.0 V6 116
GUIDE BUSH f. SLEEVE BEARING 3.0 V6 117
CLUTCH SET 3.2 V6 24V 118
GUIDE BUSH f. SLEEVE BEARING 3.2 V6 24V 119
Führungshülse f. Ausrücker 3.0 V6 120
CLUTCH ACTUATION 121
1.8/2.0 TS 121
2.0 JTS 122
2.0 V6 Turbo 123
3.0 V6 12V 124
3.0 V6 24V 125
3.2 V6 24V/GTA 126
SUSPENSION 127
STRUT FRONT 127
ATTACHMENT FRONT 128
ATTACHMENT REAR 129
STABILIZER FRONT 130
STABILIZER REAR 131
WHEEL BEARING 4-Cyl. 132
WHEEL BEARING 6-Cyl. 133
STRUT REAR 134
STEERING 135
STEERING PARTS 135
BRAKE 136
BRAKE DISCS 136
BRAKE PADS 137
CALIPER FRONT >1998 138
CALIPER FRONT 1998> 139
CALIPER REAR 140
BRAKE SERVO/BRAKE MASTER CYL. 141
BRAKE VALVE 142
BRAKE HOSES 143
BRAKE CABLE 144
ELECTRIC 145
ENGINE ELECTRIC 145
IGNITION SYSTEM 1.8/2.0 TS 145
IGNITION SYSTEM 2.0 JTS 146
IGNITION SYSTEM 2.0 V6 Turbo 147
IGNITION SYSTEM 3.0 V6 12V 148
IGNITION SYSTEM 3.0/3.2 V6 24V 149
STARTER/ALTERNATOR 1.8/2.0 TS 150

STARTER/ALTERNATOR- 2.0 JTS 151
STARTER/ALTERNATOR- 2.0 V6 Turbo 152
STARTER/ALTERNATOR- 3.0 V6 12V 153
STARTER/ALTERNATOR- 3.0/3.2 V6 24V 154
BODYWORK ELECTRICS 155
WINDOWLIFT 155
ANTENNA 156
INTERIOR 157
FOOT MATS 157
MISCELLANEOUS 158
BATTERY CHARGERS 158
FOOT MATS 159
FENDER PROTECTOR 160

Karosserieteile/Body Parts gtv/spider (916)

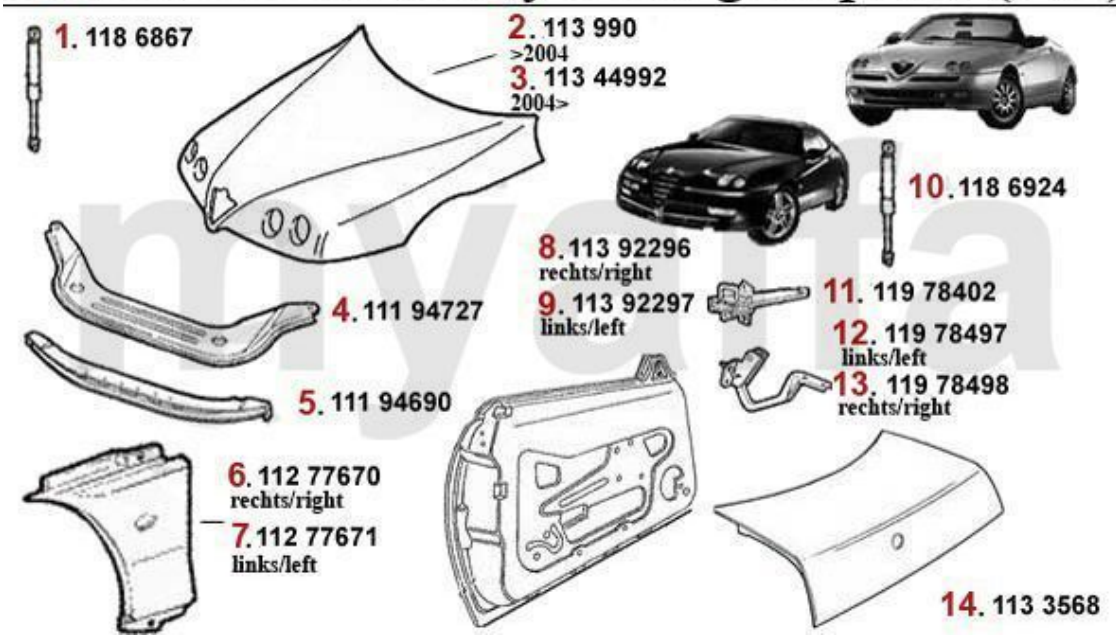

1	1186867	OE. 60689182 GAS SPRING HOOD	€39.41
2	113990	OE. 60600990 HOOD BONNET gtv/spider (916) >2004	On request
3	11344992	OE. 156044992 HOOD BONNET	€924.37
4	11194727	OE. 60594690 Crossrail	On request
5	11194690	OE. 60594690 Crossrail	€209.24
6	11277670	OE. 60577670 FRONT RIGHT FENDER gtv/spider (916)	€150.42
7	11277671	OE. 60577671 FRONT LEFT FENDER gtv/spider (916)	€150.42
8	11392296	OE. 60692296 RIGHT DOOR COMPLETE gtv/spider (916)	On request
9	11392297	OE. 60692297 LEFT DOOR COMPLETE gtv/spider (916)	On request
10	1186924	OE. 60594694 GAS SPRING BOOT	€33.19
11	11978402	OE. 60578402/60626722 DOOR RETAINING STRAP	€67.14
12	11978497	LEFT TRUNKLID HINGE SPIDER (916)	€54.62
13	11978498	RIGHT TRUNKLID HINGE SPIDER (916)	On request
14	1133568	OE. 60603568 TRUNK LID spider	€617.65

Stoßstangen/Bumpers gtv/spider (916)



1	13191099	OE. 153791099 FRONT BUMPER COMPL. gtv/spider (916)	On request
2	13125099	OE. 153925099 FRONT BUMPER COMPL. gtv/spider (916) >2003	On request
3	13145186	OE. 156054186 FRONT BUMPER gtv/spider (916) 2004>	On request
4	13277411	OE. 60577411 GRILLE gtv/spider (916) >1998	On request
5	13258555	OE. 60658555 GRILLE gtv/spider (916) >2003	On request
6	13284741	OE. 60684741 GRILLE gtv/spider (916) 2003>	On request
7	13284740	OE. 60684740 GRILLE	On request
8	1360330	BADGE 75 mm ALFA ROMEO	€31.05
9	13658973	OE. 46558973 EMBLEM	€65.46
10	13120099	OE. 150020099 REAR BUMPER gtv/spider (916) >2003	On request
11	13134417	OE. 156034417 RAER BUMPER gtv/spider (916) 2003>	On request

Car Cover gtv/spider (916)



1	*9111080*	*CAR COVER ECOLINE GIULIA, RED*	*€49.58*
3	*9112060*	*CAR COVER MADE TO MEASURE ALFA ROMEO GTV/SPIDER 916 WITH BADGE, RED*	*€142.02*

Außenspiegel/Mirror gtv/spider (916)



1	*14025724*	*OE. 156025724 OUTSIDE MIRROR LEFT GTV/SPIDER (USED)*	*On request*
2	*14025727*	*OE. 156025727 OUTSIDE MIRROR RIGHT GTV/SPIDER (916) (USED)*	*On request*
3	*14179160*	*OE. 60779160 GLASS f. MIRROR LH (916)*	*On request*
4	*14178791*	*OE. 60778791 GLASS f. MIRROR RIGHT gtv/spider (916)*	*On request*

Beleuchtung/Lightning spider/gtv (916)



1	15176350	OE. 60576350 HEADLIGHT L gtv/spider (916)	On request
2	15176351	OE. 60576351 HEADLIGHT R gtv/spider (916)	On request
3	15495863	OE. 60595863 FLASHER/FOGLIGHT L gtv/spider (916) >2003	On request
4	15495864	OE. 60595864 FLASHER/FOGLIGHT R gtv/spider (916) >2003	On request
5	1553162	ADDITIONAL LEFT INDICATOR 145/6,155 ,GTV/SPIDER (916)	€14.71
6	1553161	ADDITIONAL RIGHT INDICATOR 145/6,155 ,GTV/SPIDER (916)	€14.71
7	15378587	OE. 60578587 REAR LIGHT	On request
8	15674850	OE. 60574850 NUMBERPLATELIGHT gtv/spider (916)	On request
9	1558611	OE. 60678611 SIDE FLASHER WHITE	On request
10	1558612	OE. 60678612 SIDE FLASHER WHITE	On request

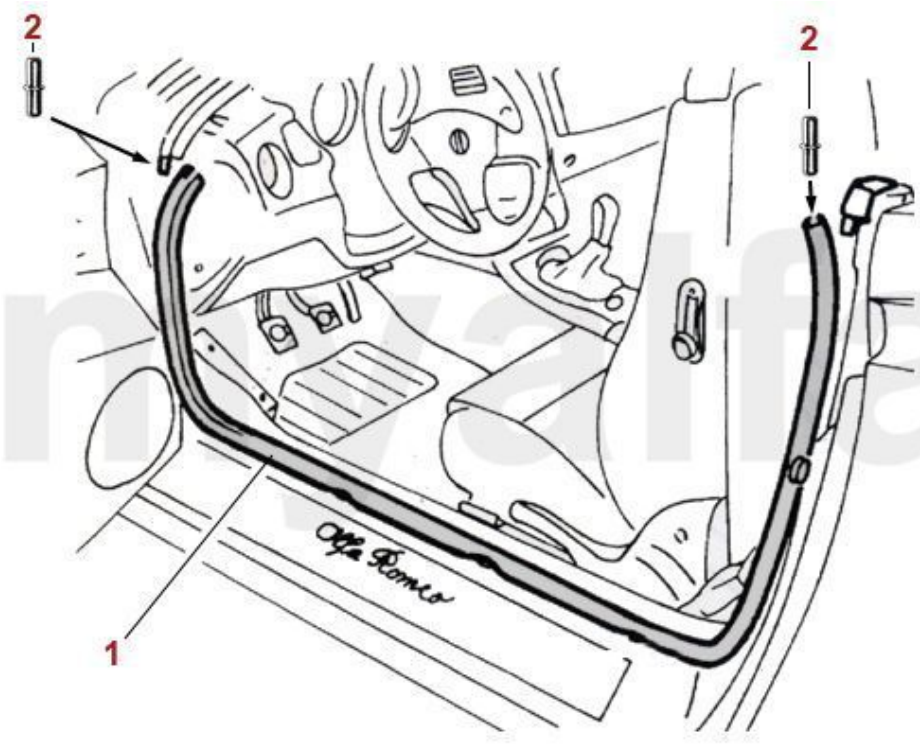

1	1629160	DOOR SEAL PARTIAL REPLACEMENT PARTS GTV/Spider (916) LEFT OR RIGHT	€49.58
2	16291760	OE. 60591760 SEALING PLUG FOR DOOR SEAL/ TRUNK SEAL GTV/Spider (916)	€5.46
3	16289854	OE. 60589854 CHANNEL 916 LEFT OR RIGHT SIDE	€20.59
4	16211662	OE. 60589853 SEALING GASKET (916) DOOR/BODY B-PILLAR RIGHT	€31.51
4	16211663	OE. 60605396 SEALING GASKET (916) DOOR/BODY B-PILLAR LEFT	€31.51
5	1622330	ENDPIECES B-PILLAR SEAL GTV (916) SET OE. 60523307 / 60523308	€27.31

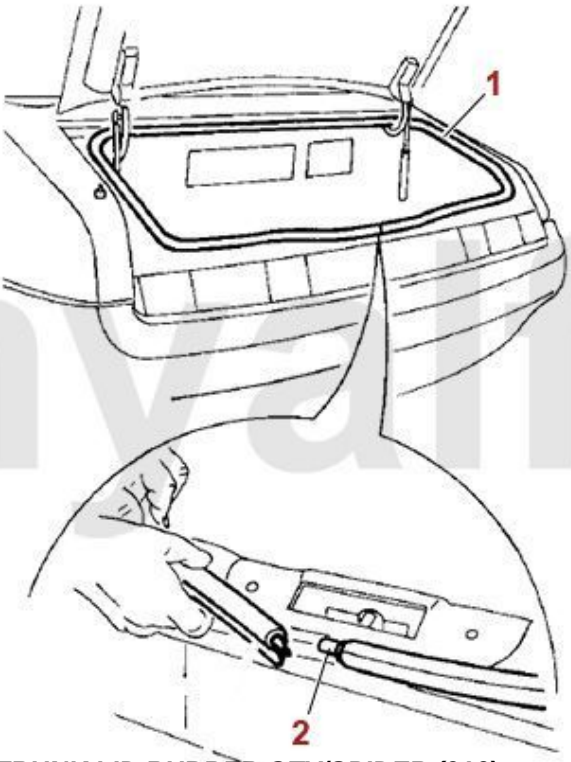

1	16262569	OE. 60662569 TRUNK LID RUBBER GTV/SPIDER (916)	€38.57
2	16291760	OE. 60591760 SEALING PLUG FOR DOOR SEAL/ TRUNK SEAL GTV/Spider (916)	€5.46

Verdeck/Soft Top Spider (916)

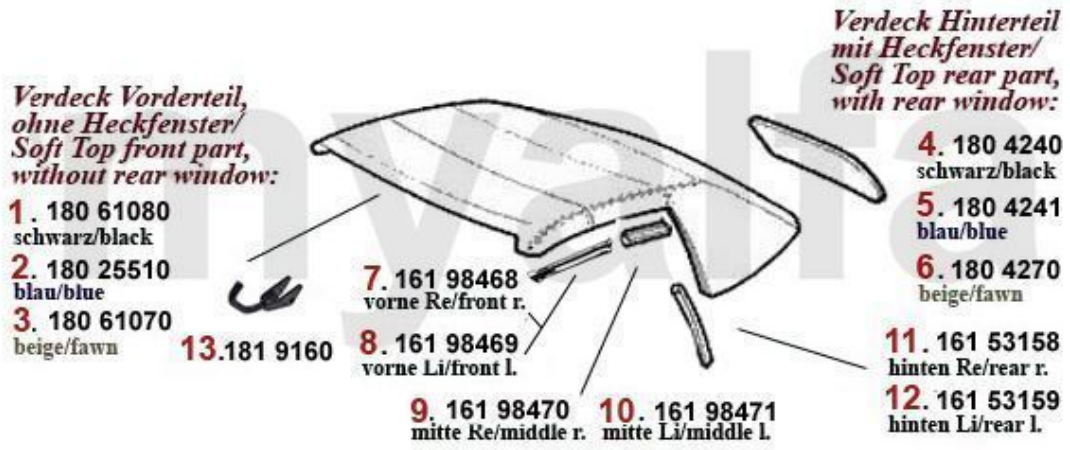

1	18061080	SOFT TOP SPIDER (916) 1995-98 SONNENLAND BLACK	€668.07
1	18025510	SOFT TOP SPIDER (916) 1995-98 SONNENLAND BLUE	€713.45
1	18061070	SOFT TOP SPIDER (916) 1995-98 SONNENLAND BEIGE	€780.67
1	1800030	SOFT TOP SPIDER (916) 1998-05 SONNENLAND BLACK	€668.07
1	1800040	SOFT TOP SPIDER (916) 1998-05 SONNENLAND BLUE	€713.45
1	1800050	SOFT TOP SPIDER (916) 1998-05 SONNENLAND BEIGE	€710.08
2	1804240	SOFT TOP SPIDER (916) 1995-05 SONNENLAND, ONLY REAR PART, BLACK	€359.66
2	1804241	SOFT TOP SPIDER (916) 1995-05 SONNENLAND, ONLY REAR PART, BLUE	€359.66
2	1804270	SOFT TOP SPIDER (916) 1995-05 SONNENLAND, ONLY REAR PART, BEIGE	€410.08
3	16198468	OE. 60598468 FRONT SOFT TOP RUBBER RIGHT SPIDER (916)	€57.14
3	16198469	OE. 60598469 FRONT SOFT TOP RUBBER LEFT SPIDER (916)	€57.14
4	16198470	OE. 60598470 SOFT TOP/SIDE WINDOW RUBBER SEAL SPIDER (916) MIDDLE RIGHT	€49.16
4	16198471	OE. 60598471 SOFT TOP/SIDE WINDOW RUBBER SEAL SPIDER (916) MIDDLE LEFT	€49.16
5	16153158	OE. 60653158 REAR RIGHT SOFT TOP / SIDE WINDOW RUBBER SEAL SPIDER (916)	€62.94
5	16153159	OE. 60653159 REAR LEFT SOFT TOP / SIDE WINDOW RUBBER SEAL SPIDER (916)	€62.94
6	1819160	ROOF LOCK REPAIR KIT SPIDER (916)	€25.17
7	1813050	GEAR DRIVE FOR SOFT TOP PROTECTION LID SPIDER (916)	€83.19
8	18130546	MOTOR HOOD BONNET SPIDER 916	€284.87



1	*1360330*	*BADGE 75 mm ALFA ROMEO*	*€31.05*
2	*13658973*	*OE. 46558973 EMBLEM*	*€65.46*
3	*13619118*	*OE. 60619118 SCRIPT*	*€33.53*
4	*1360060*	*BADGE PININFARINA SERIES 2 SIDE*	*€20.97*
5	*13679250*	*OE. 60779250 BADGE TRUNK SPIDER/GTV (916)*	*€45.80*

Windschott/ Wind Deflector Spider (916)

1. 181 916



1	*181916*	*WIND DEFLECTOR SPIDER 916 1995-2006*	*€195.38*

Keilriemen/V-Belt gtv/spider (916) TS 16V

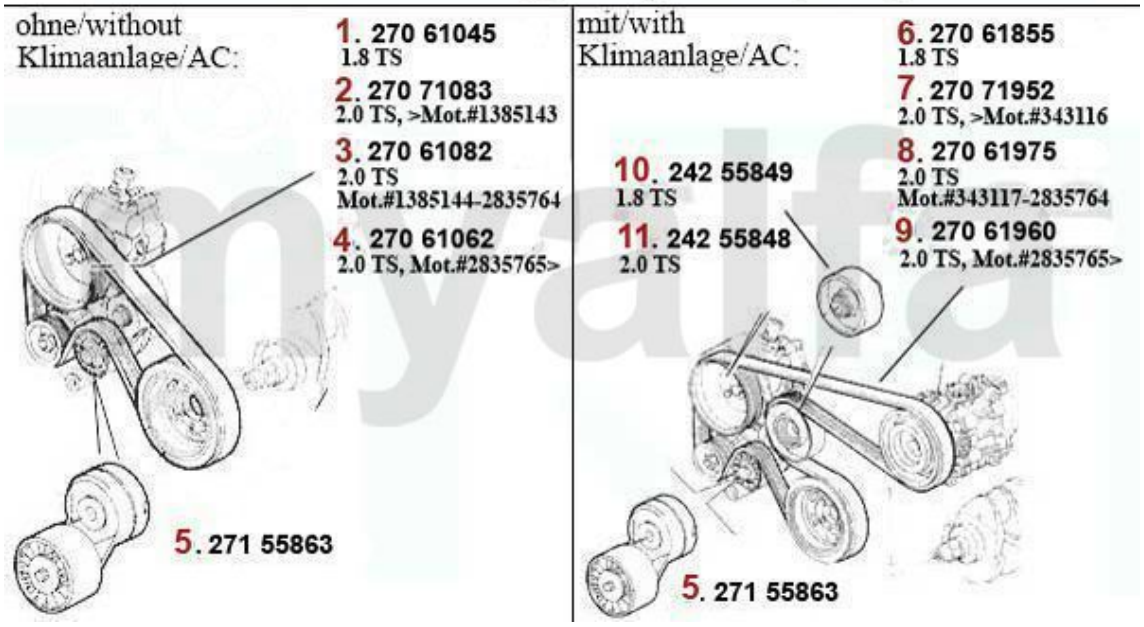

1	27061045	Keilrippenriemen 6PK1045 145/6 Bj. 97>,155,156,gtv&spider(916) 1.4/1.6 /1.8 TS 16V ohne K	€16.89
2	27071083	Keilrippenriemen 7PK1083 145/6,155 156,166,gtv/spider (916) bis Motor # 1385143, Servopump	€30.76
3	27061082	Keilrippemriemen 6PK1082 145/6 2.0 TS 16V,147 2.0 TS/JTS,156/166 2.0 T S,gtv/spider (916)	€21.18
4	27061062	OE. 60676136 POLY-V BELT	€18.91
5	27155863	OE. 60814110 TENSIONER	€41.60
6	27061855	Keilrippenriemen 6PK1855 145/6 1.4/ 1.8 TS 16V Bj. 97>,1.6 TS,1.6/1.8 T S 16V,gtv/spider 1	€24.20
7	27071952	OE. 60617859/60652358 V-BELT	€45.13
8	27061975	OE: 71753673 BELT	€23.78
9	27061960	OE. 60653030 V-BELT	€34.45
10	24255849	Umlenkrolle Keilrippenriemen 145/6/7,155/6,gtv/spider (916) 1.4/1.6/1.8 TS (mit Klima)	€33.19
11	24255848	OE. 60602136 IDLE PULLEY	€41.68

Keilriemen/V-Belt gtv/spider (916) 2.0 JTS

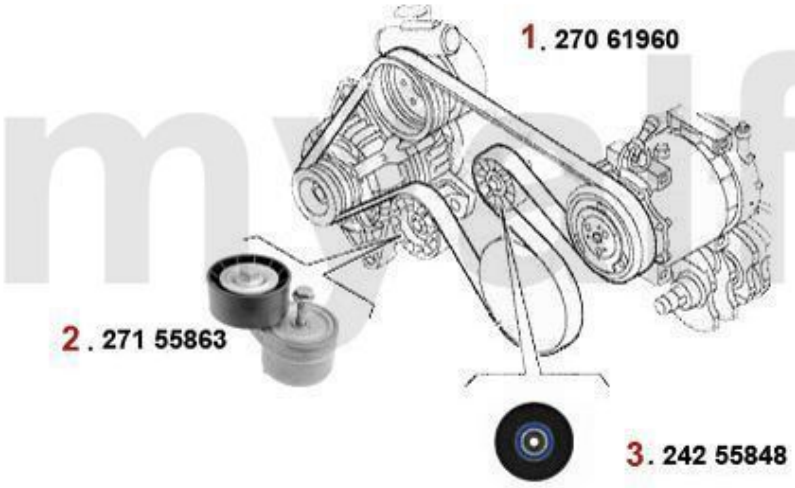

1	27061960	OE. 60653030 V-BELT	€34.45
2	27155863	OE. 60814110 TENSIONER	€41.60
3	24255848	OE. 60602136 IDLE PULLEY	€41.68

Keilriemen/V-Belt gtv/spider (916) 2.0 V6 Turbo

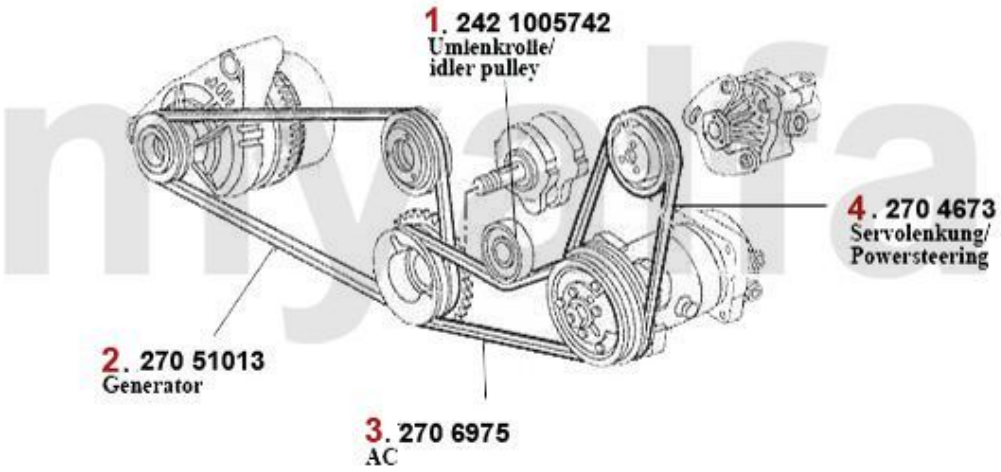

1	24205742	OE. 60570850 PULLEY	€108.40
2	27051013	OE. 60585396 V-BELT 155 2.5 V6 10.1992-12.1997, GTV/SPIDER (916) 2.0 V6 TURBO / 3.0 V6	€15.04
3	2706975	Keilrippenriemen 6PK975 155 2.5 V6 gtv/spider (916) V6,Klimakompressor	€22.27
4	2704673	V-BELT 4PK673 155 2.5V6 GTV/SPIDER(916) V6 5.98> POWER STEERING PUMP	€13.11

Keilriemen/V-Belt gtv/spider (916) 3.0 V6 12V

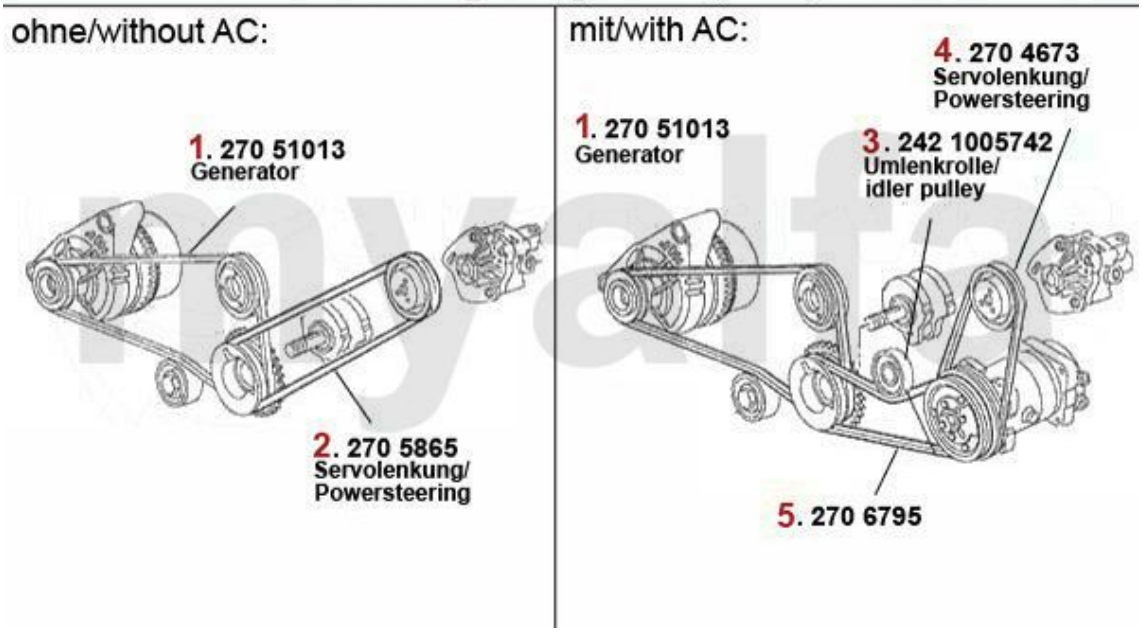

1	27051013	OE. 60585396 V-BELT 155 2.5 V6 10.1992-12.1997, GTV/SPIDER (916) 2.0 V6 TURBO / 3.0 V6	€15.04
2	2705865	OE.60597250 V-BELT GTV/SPIDER 3.0 V6 STEERING PUMP, 145/6 1.4/1.6ie Bj. >1996 WATER PUMP	€16.72
3	24205742	OE. 60570850 PULLEY	€108.40
4	2704673	V-BELT 4PK673 155 2.5V6 GTV/SPIDER(916) V6 5.98> POWER STEERING PUMP	€13.11
5	2706975	Keilrippenriemen 6PK975 155 2.5 V6 gtv/spider (916) V6,Klimakompressor	€22.27

Keilriemen/V-Belt gtv/spider (916) 3.0/3.2 V6 24V

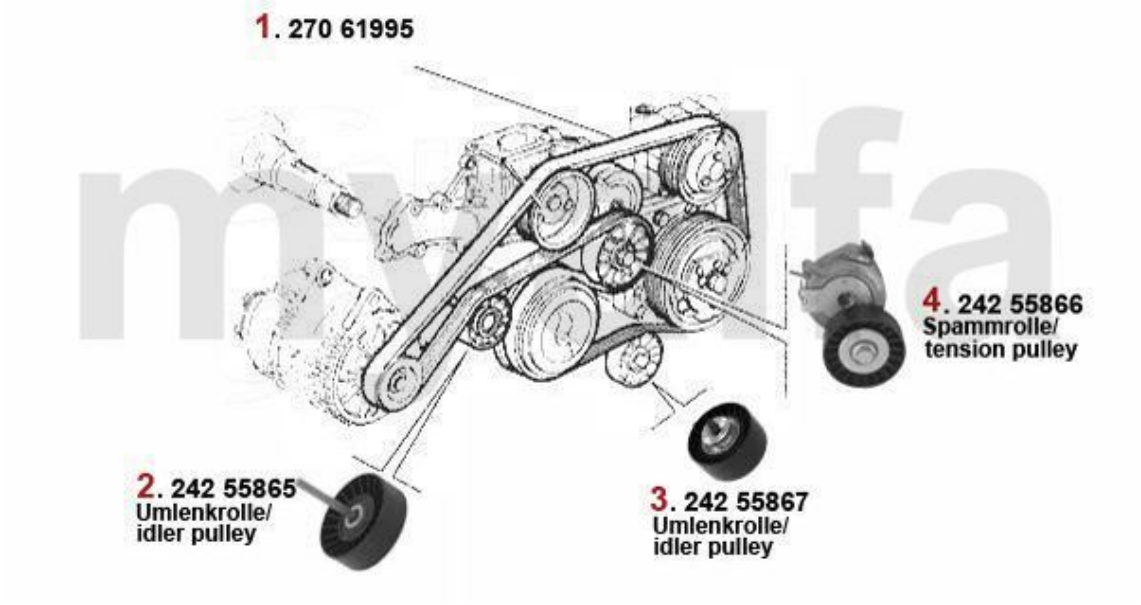

1	*27061995*	*OE. 60626658 V-BELT*	*€29.58*
2	*24255865*	*OE. 55190054 IDLE PULLEY*	*€49.58*
3	*24255867*	*OE. 55190052 IDLE PULLEY*	*€40.34*
4	*24255866*	*OE. 55190053 TENSIONER*	*€108.07*

Kraftstoffpumpe/Fuel Pump gtv/spider (916) 1.8/2.0 TS



1	*2536416*	*OE. 7782620 FUEL PUMP 145/6, 155, gtv/spider (916) Boxer/TS 16V/ V6 Turbo > 1998*	*€79.83*
2	*2536563*	*OE. 60655432 FUEL PUMP gtv/spider (916) 1.8/2.0 TS 1998>/V6 24V CF2/3*	*On request*

Luftmengenmesser/Air Flow Meter gtv/spider (916) 2.0 TS



1	25517403	OE. 60617402 UPPER AIR FLOW HOSE (throttleside) gtv/spider (916) 2.0 TS	€40.34
2	25517404	OE. 60617402 LOWER AIR FLOW HOSE (AIR FLOW METER SIDE) gtv/spider (916) 2.0 TS 16V #	€37.31
3	2547008	OE. 46707008 FLOWMETER	On request
4	25459804	OE.46541253/60814852/46559804/55193048 AIR FLOW METER	€193.19

Kraftstoffpumpe/Fuel Pump gtv/spider (916) 2.0 JTS



1	*2534361*	*OE. 60684361 FUEL PUMP gtv/spider (916) 2.0 JTS*	*On request*

Kraftstoffpumpe/Fuel Pump gtv/spider (916) 2.0 V6 Turbo



1	*2536416*	*OE. 7782620 FUEL PUMP 145/6, 155, gtv/spider (916) Boxer/TS 16V/ V6 Turbo > 1998*	*€79.83*
2	*2536504*	*OE. 60655431 FUEL PUMP gtv/spider 2.0 V6 Turbo 1998>*	*On request*

Kraftstoffpumpe/Fuel Pump gtv/spider (916) 3.0 V6



1	2536416	OE. 7782620 FUEL PUMP 145/6, 155, gtv/spider (916) Boxer/TS 16V/ V6 Turbo > 1998	€79.83
2	2536504	OE. 60655431 FUEL PUMP gtv/spider 2.0 V6 Turbo 1998>	On request
3	25611469	OE.60811469/60611308 FUEL PRESSURE REDUCER SCREW IN VERSION FOR VARIOUS MODELS	€116.81

Luftmengenmesser/Air Flow Meter gtv/spider (916) 3.0 V6

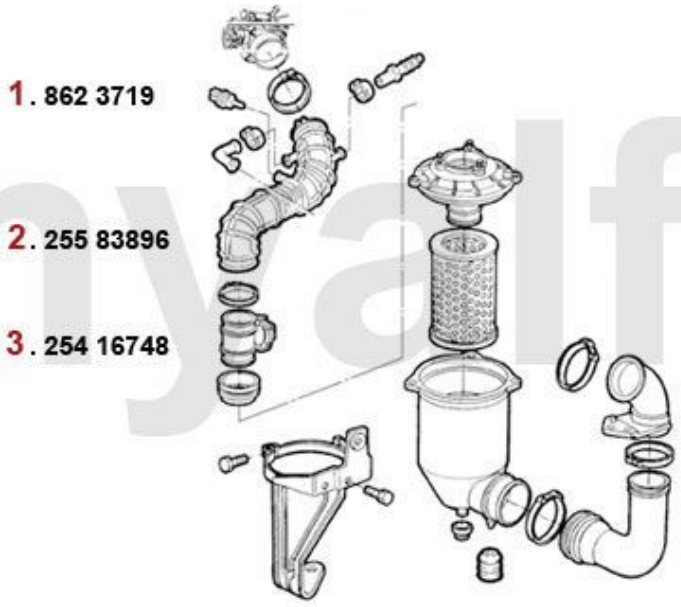

1	*8623719*	*OE. 7763719 SENDING UNIT*	*€40.76*
2	*25583896*	*OE. 60583896 AIR FLOW HOSE*	*€66.39*
3	*25416748*	*OE. 46416748 AIR FLOWMETER 164/Super, gtv/spider (916)*	*€209.24*



0 25558051 OE. 60658051 INTAKE HOSE (916) V6 24V ***€105.04***

Kraftstoffpumpe/Fuel Pump gtv/spider (916) 3.0/3.2 V6 24V



1	2536416	OE. 7782620 FUEL PUMP 145/6, 155, gtv/spider (916) Boxer/TS 16V/ V6 Turbo > 1998	€79.83
2	2536563	OE. 60655432 FUEL PUMP gtv/spider (916) 1.8/2.0 TS 1998>/V6 24V CF2/3	On request

Dichtungen Motor/Gaskets Engine gtv/spider (916) TS 16V



1	2333700	Ventildeckeldichtung 2-teilig für Alu-Ventildeckel 145/6,155,156 166 Diverse 4-Zylinder bj	€28.49
2	2335400	VALVE COVER GASKET FOR PLASTIC_VALVE COVER 145/6,156,gtv/Spider (916) FROM 04.98 ON	€30.00
3	2338200	OE. 71753052 SEALING GASKET	€14.71
4	23355300	SHAFT SEAL CAMSHAFT 145/6,15 5,156 1.6,1.7,1.8,2.0 16V TS	€15.04
5	25295390	OE. 60595390 INTAKERUBBER	€13.36
6	23359747	Ansaugkrümmerdichtung 145/6,147,155 156,166,gtv/spider (916),Nuovo GT # 0165088> TS 16V	€21.18
7	380272	OE. 73502761 HEADER GASKET	On request
8	3802761	OE. 55194028 HEATERGASKET	€25.13
9	23343800	OILSEAL OE:40005010	€10.50
10	233800	Simmerring Kurbelwelle hinten (Schwungscheibe) 147 1.6 TS 16V/1.9 JTD Bj. 03 >,156 1.9/2.4	€43.28

Kopfdichtsatz/Head Set gtv/spider (916) TS 16V

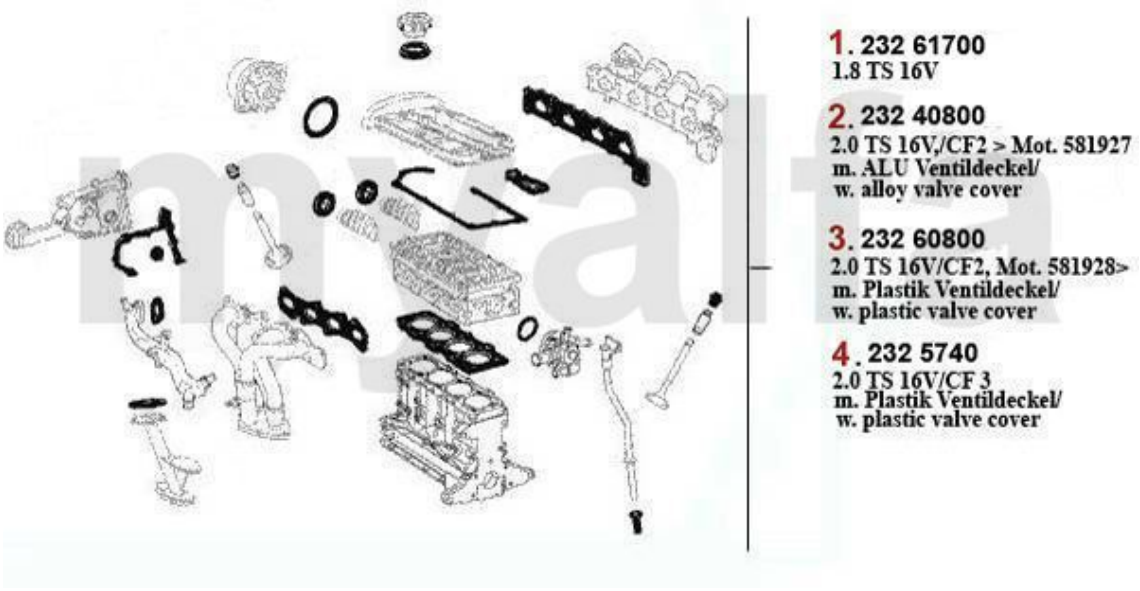

1	23261700	OE. 71713631 HEADSET	€111.26
2	23240800	HEAD GASKET SET 145/6,155,GTV/SPIDER (916) 2.0 TS 110KW FROM 95-01 ALUMINIUM VALVE COVER	€142.02
3	23260800	Kopfdichtsatz 145/6,156,gtv/spider (916) 2.0 16V TS Bj. 97-01 Kunstoff-Ventildeckel	On request
4	2325740	OE. 71717685 HEAD SET 147,156,Nuovo GT 1.8/2.0 TS CF3	€197.48

Motordichtsatz/Full Set gtv/spider (916) 2.0 TS 16V

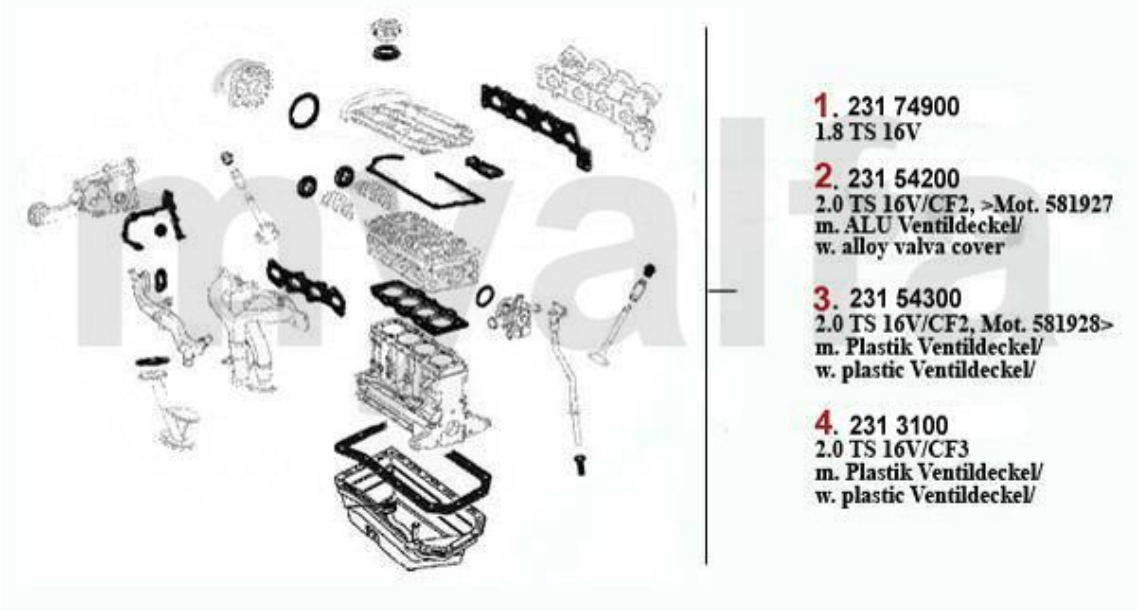

1	23174900	OE. 71713632 FULL SET 1.6/1.8 TS 16V, 1997>	€133.61
2	23154200	Motordichtsatz 145/6,155,156,166 1.6 - 2.0 TS 16V Bj. >98 Alu-Ventildeckel	€133.61
3	23154300	ENGINE GASKET SET 145/6,155, gtv/spider (916) 2.0 TS Bj. 95-01 110KW Alu-Ventildeckel	€150.42
4	2313100	OE. 71717687 FULL SET	€200.84

Kopfschraubensatz/Head Srew Set gtv/spider (916) TS 16V

1. 228 152080

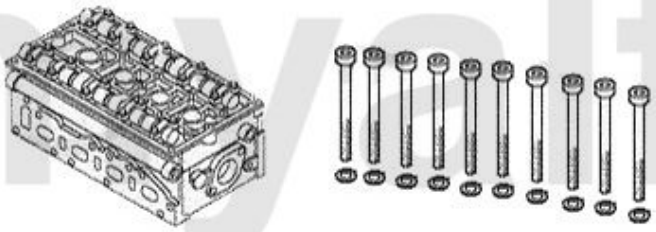

1	*22852080*	*OE. 7710582 HEAD SCREW SET*	*€67.14*

Dichtungen Motor/Gaskets Engine gtv/spider (916) JTS



1	23387339	OE.60669492 VALVE COVER GASKET2.0 JTS 156, GTV/SPIDER (916),NUOVO GT	€44.96
2	23315492	OE. 7715492 Rubber	€3.78
3	2338200	OE. 71753052 SEALING GASKET	€14.71
4	23355300	SHAFT SEAL CAMSHAFT 145/6,15 5,156 1.6,1.7,1.8,2.0 16V TS	€15.04
5	23386100	Ansaugkrümmerdichtung 156,gtv / spider (916), Nuovo GT 2.0 JTS	€25.46
6	3802761	OE. 55194028 HEATERGASKET	€25.13
7	25295390	OE. 60595390 INTAKERUBBER	€13.36
8	23343800	OILSEAL OE:40005010	€10.50
9	233800	Simmerring Kurbelwelle hinten (Schwungscheibe) 147 1.6 TS 16V/1.9 JTD Bj. 03 >,156 1.9/2.4	€43.28

Kopfdichsatz/Head Set gtv/spider (916) JTS

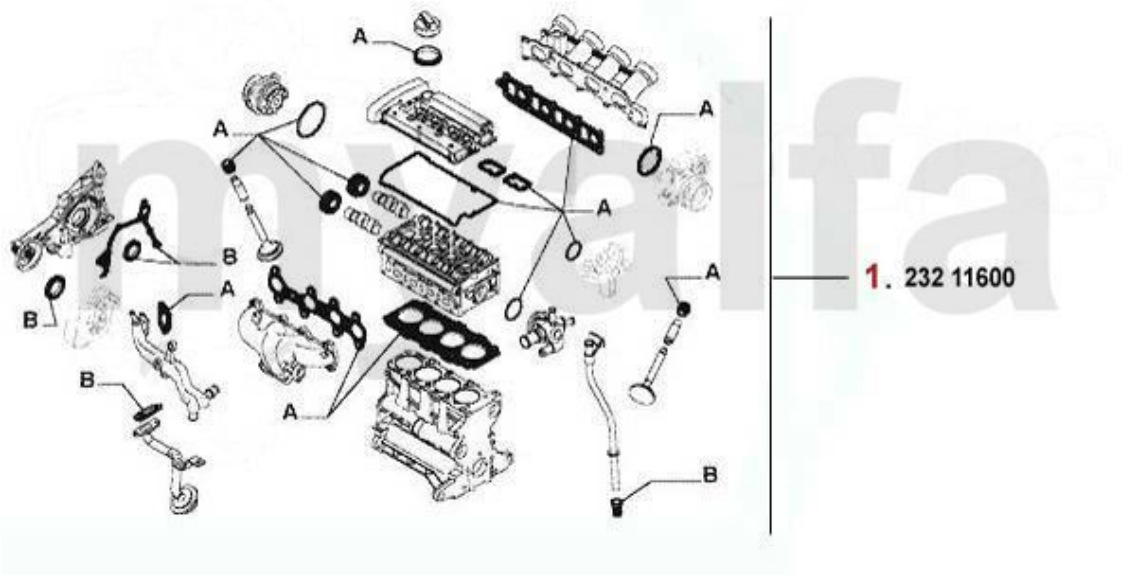

1 23211600 OE. 71752418 HEAD GASKET SET €155.46

Dichtungen Motor/Gaskets Engine gtv/spider (916) 2.0 V6 Turbo



1	23324600	OE. 60512948 RIGHT VALVE COVER GASKET	€33.53
2	23324700	OE. 60512949 LEFT VALVE COVER GASKET SET	€33.53
3	23310900	OE.60570617 OIL SEAL CAMSHAFT V6	€14.71
4	23376200	INTAKE MANIFOLD GASKET 155, 164/SUPER ,166,GTV/SPIDER V6 12V	€13.95
5	38014800	OE. 60563670/60630269 EXHAUST MANIFOLD GASKET 6,75,90,155 , 164/Super,RZ/SZ 6-CYLINDER	€5.46
6	25213179	OE. 60513179 INTAKE RUBBER	€20.00
7	23323600	OE. 60567605/7 Sealing Gasket	€16.39
8	2330600	OIL SEAL CRANK SHAFT REAR 84/105/12 SPIDER IE 1990-93 ORIGINAL QUALITY	€29.33
9	23307294	OE. 60507294 RUBBER RING f. SPARK PLUG SHAFT V6/12V	€4.96

Kopfdichtsatz/Head Set gtv/spider (916) 2.0 V6 Turbo

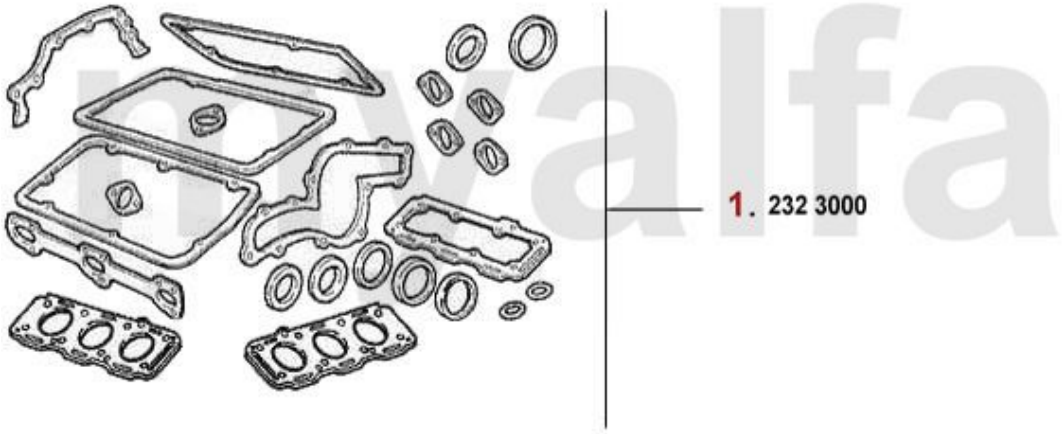

1	*2323000*	*Kopfdichtsatz 164/Super gtv/spider (916) 2.0 V6 Turbo*	*€159.66*

Motordichtsatz/Full Set gtv/spider (916) 2.0 V6 Turbo

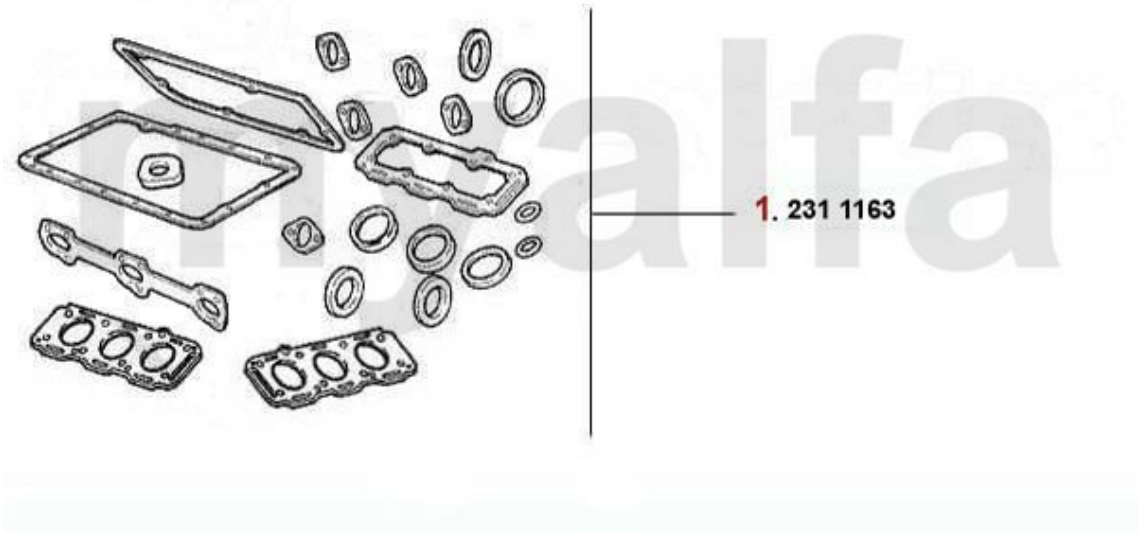

1	*2311163*	*OE. 5895399 FULL SET REINZ 2.0 V6 TURBO*	*€335.29*

Dichtungen Motor/Gaskets Engine gtv/spider (916) V6 12V

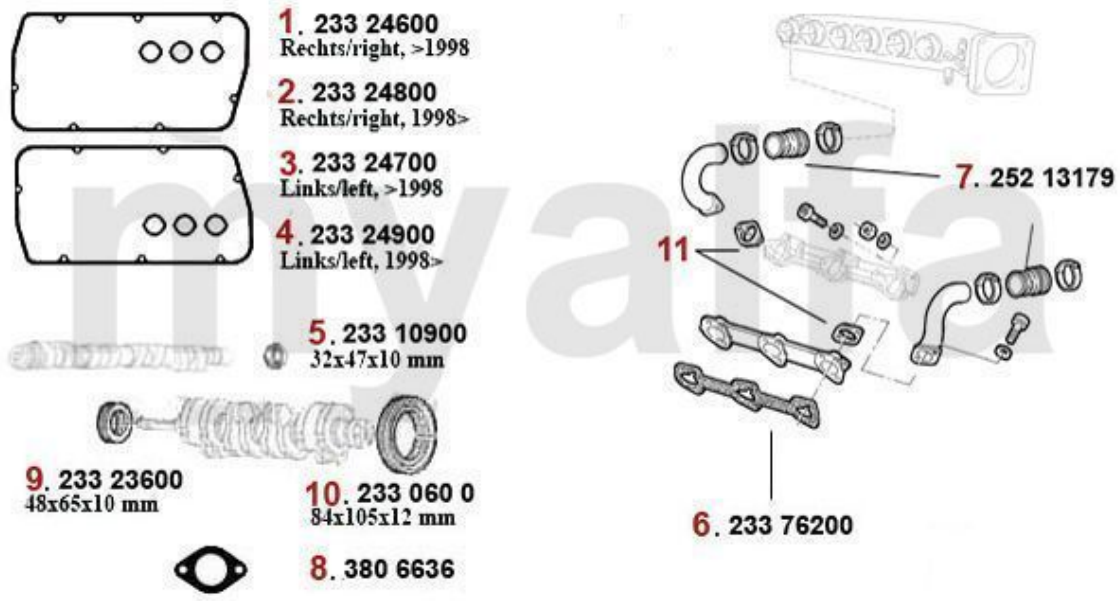

1	23324600	OE. 60512948 RIGHT VALVE COVER GASKET	€33.53
2	23324800	OE. 60512948 VALVE COVER GASKET SET	€36.05
3	23324700	OE. 60512949 LEFT VALVE COVER GASKET SET	€33.53
4	23324900	OE. 60512949 VALVE COVER GASKET SET	€36.05
5	23310900	OE.60570617 OIL SEAL CAMSHAFT V6	€14.71
6	23376200	INTAKE MANIFOLD GASKET 155, 164/SUPER ,166,GTV/SPIDER V6 12V	€13.95
7	25213179	OE. 60513179 INTAKE RUBBER	€20.00
8	3806636	OE. 60506636 EXHAUST MANIFOLD GASKET	€5.46
9	23323600	OE. 60567605/7 Sealing Gasket	€16.39
10	2330600	OIL SEAL CRANK SHAFT REAR 84/105/12 SPIDER IE 1990-93 ORIGINAL QUALITY	€29.33
11	23313180	OE. 60513180 SEALING GASKET INTAKE PIPE 3.0 V6 12V	€3.53
11	23307294	OE. 60507294 RUBBER RING f. SPARK PLUG SHAFT V6/12V	€4.96

Kopfdichtsatz/Head Set gtv/spider (916) 3.0 V6 12V

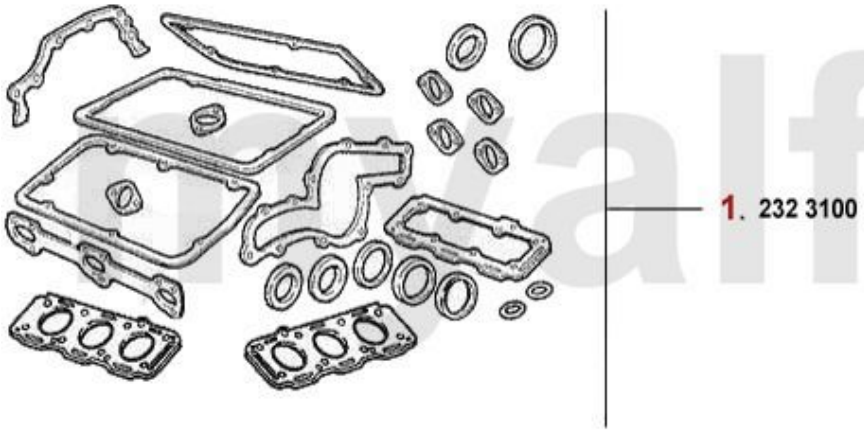

1	*2323100*	*OE. 60777986 HEAD SET*	*€176.05*

Motordichtsatz/Full Set gtv/spider (916) 3.0 V6 12V

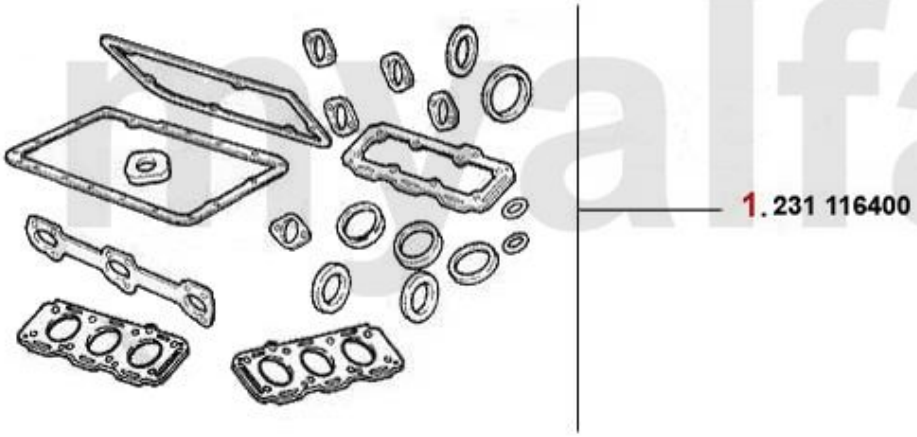

1 ***23116400*** ***OE. 60777985 FULL SET*** ***€335.29***

Dichtungen Motor/Gaskets Engine gtv/spider (916) 3.0/3.2 V6 24V

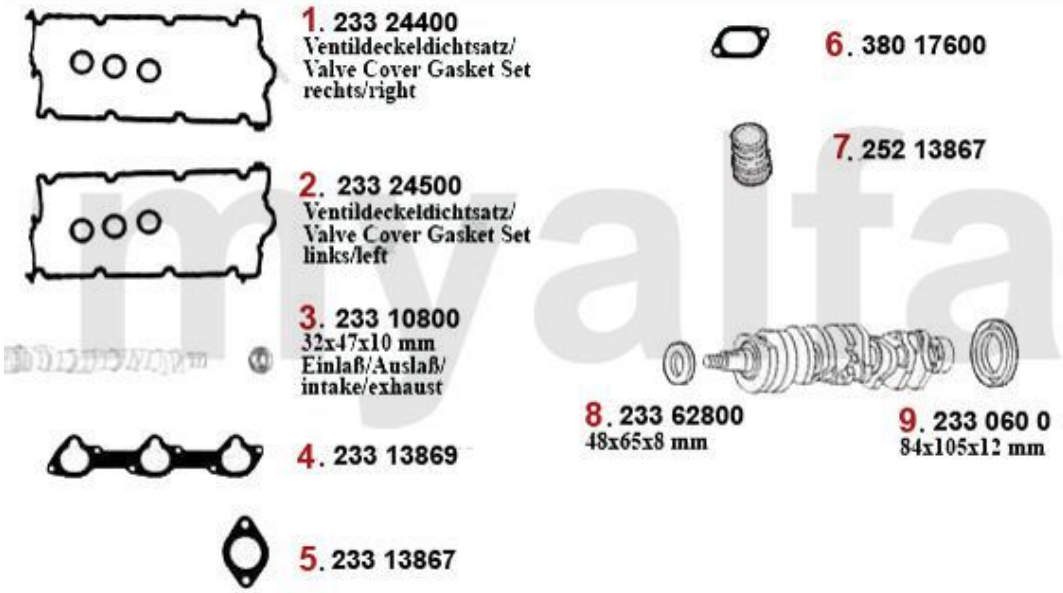

1	23324400	O.E. 60609978 VALVE COVER GASKET SET	€38.32
2	23324500	O.E. 60609979 VALVE COVER GASKET SET	€38.32
3	23310800	Seal for Camshaft #606 10 985/561 03 085	€10.50
4	23313869	INTAKE MANIFOLD GASKET 147, 156,164/SUPER,166,GTV/SPIDER (916),NUOVO GT V6 24V	€6.01
5	23313868	OE. 60513868 Sealing Gasket	€4.96
6	38017600	OE. 60573536 / 60810625 EXHAUST MANIFOLD GASKET	€8.32
7	25213867	INTAKE RUBBER 147,156, 164/SUPER, 166, GTV/SPIDER (916), NUOVO GT V6 24V	€20.08
8	23362800	OE. 60601977 CRANKSHAFT SEALS	€14.71
9	2330600	OIL SEAL CRANK SHAFT REAR 84/105/12 SPIDER IE 1990-93 ORIGINAL QUALITY	€29.33

Kopfdichtsatz/Head set gtv/spider (916) 3.0/3.2 V6 24V

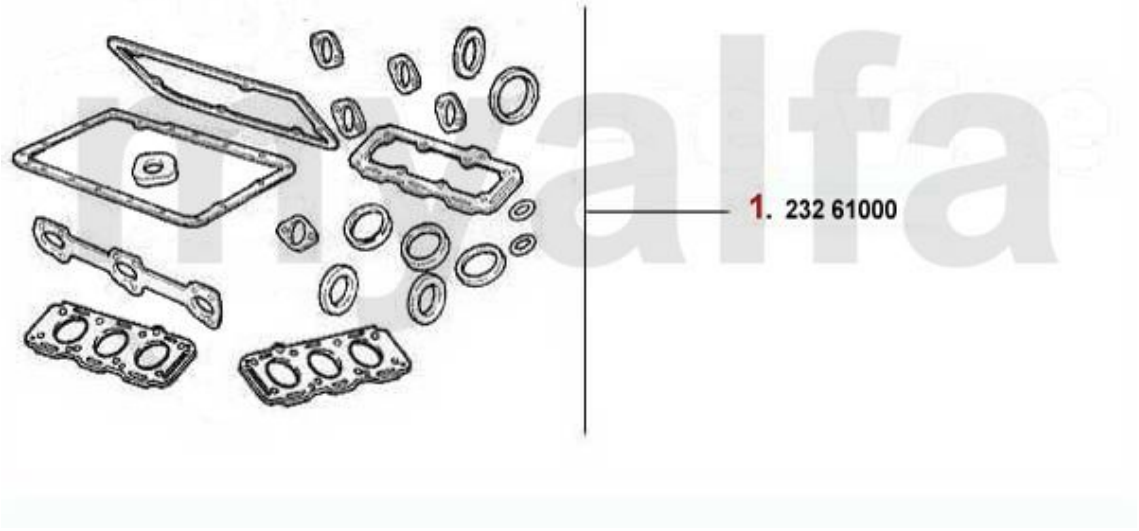

1	*23261000*	*HEAD GASKET SET 147,156,166,GTV/Spider (916), NUOVO GT V6 24V/ GTA*	*€243.70*

Motordichtsatz/Full set gtv/spider (916) 3.0/3.2 V6 24V

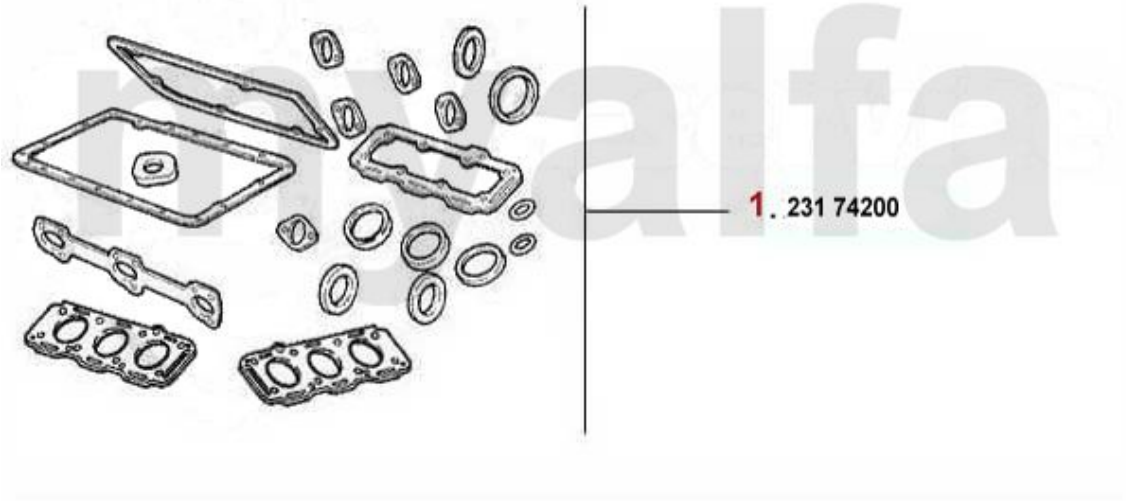

1	*23174200*	*Motordichtsatz 147,156,166,gtv/spid er (916),Nuovo GT V6 24V/GTA*	*€360.50*

Kopfschraubensatz/Head Screw Set spider/gtv (916) 3.0/3.2 V6 24V

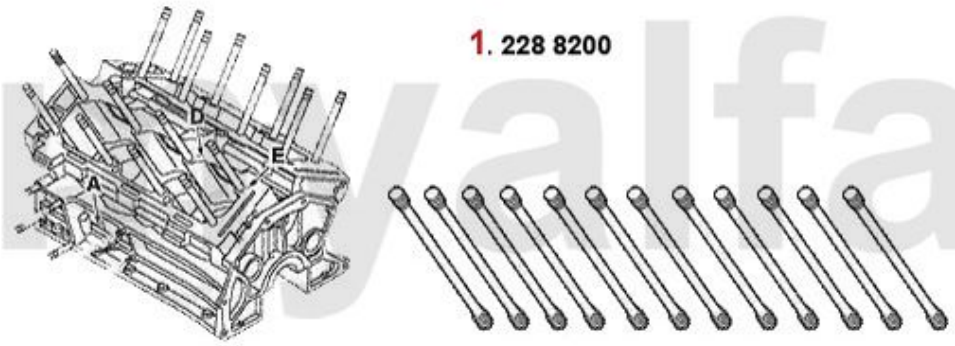

1	*2288200*	***Stud-Set Cylinder Head # 605 13 756***	*€98.40*

0	*2333490*	*XXL UNIVERSAL KIT FOR DIY GASKET MADE BY REINZ*	*€29.41*

Kühler/Radiator gtv/spider (916) 1.8/2.0 TS

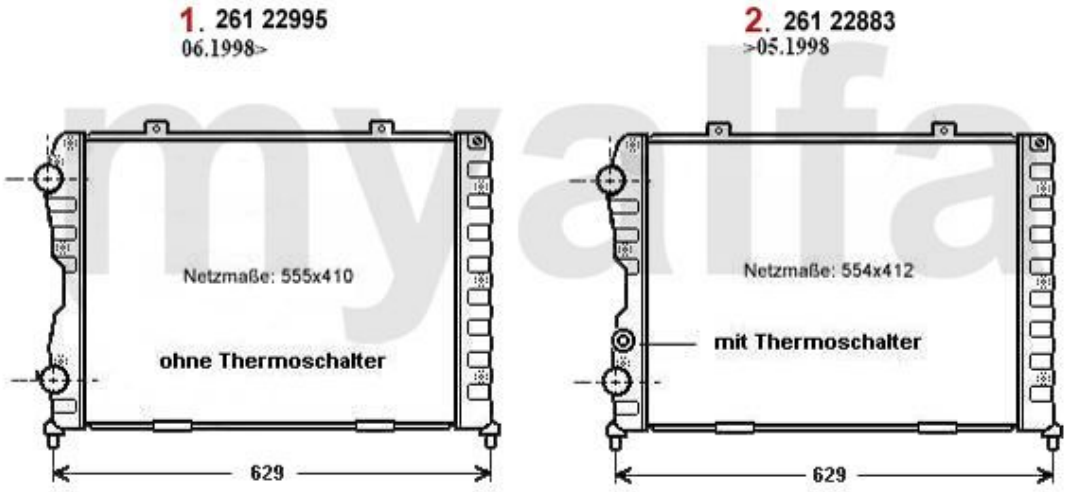

1	*26122995*	*OE. 71752882 RADIATOR*	*€303.78*
2	*26122883*	*OE. 71737158 RADIATOR*	*€234.45*

Thermostat gtv/spider (916) 1.8/2.0 TS





1	*26349083*	*OE. 60602148 THERMOSTAT 145/6,155,916 TS 16V*	*€88.15*
2	*26350688*	*OE. 60653946 THERMOSTAT*	*€56.72*

Wasserpumpe/Waterpump gtv/spider (916) 1.8/2.0 TS

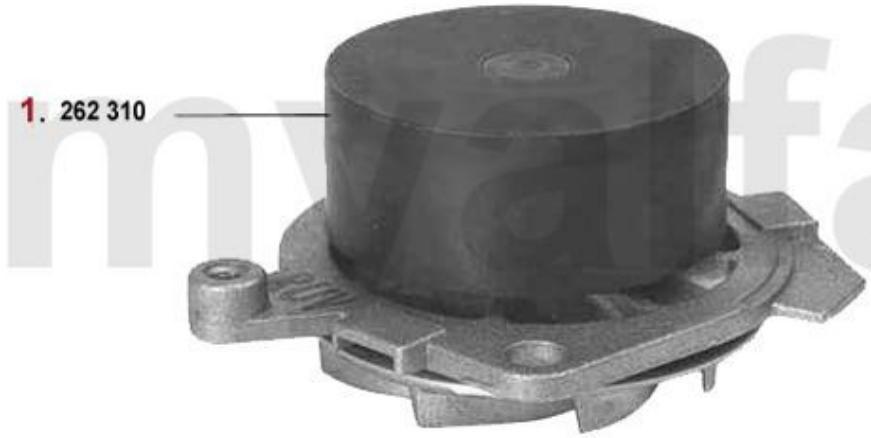

1	*262310*	*OE. 60586222 WATERPUMP TS 16V*	*€62.69*

Kühler/Radiator gtv/spider 2.0 JTS

1. 261 22995



1 ***26122995 OE. 71752882 RADIATOR*** *€303.78*

Thermostat gtv/spider (916) 2.0 JTS



1 ***26376067*** ***OE. 60676067 THERMOSTAT 156, gtv/spider (916),Nuovo GT 2.0*** ***€63.78***

Wasserpumpe/Waterpump gtv/spider (916) 2.0 JTS



1	*262310*	*OE. 60586222 WATERPUMP TS 16V*	*€62.69*

Kühler/Radiator gtv/spider 2.0 V6 Turbo

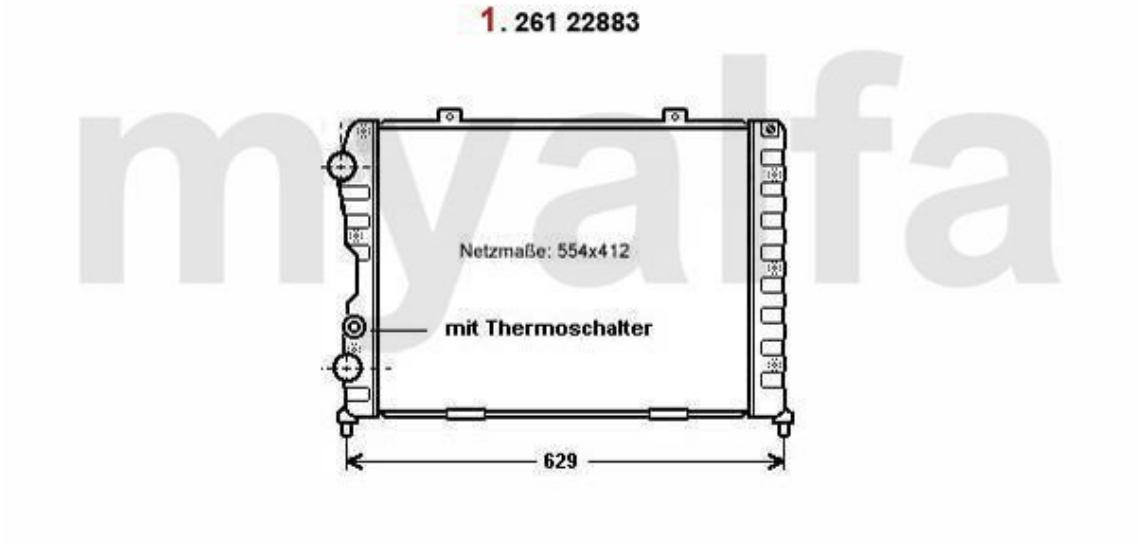

1 ***26122883*** ***OE. 71737158 RADIATOR*** ***€234.45***

Thermostat gtv/spider (916) 2.0 V6 Turbo



1	*26314637*	*THERMOSTAT INLAY FOR VARIOUS V6 MOTORS*	*€29.33*

Wasserpumpe/Waterpump gtv/spider (916) 2.0 V6 Turbo



1	*2621110*	*OE. 60668488 WATERPUMP 155 2.5 V6,164/ 916 3.0 V6*	*€74.79*

Motorkühler/Radiator gtv/spider (916) 3.0 V6

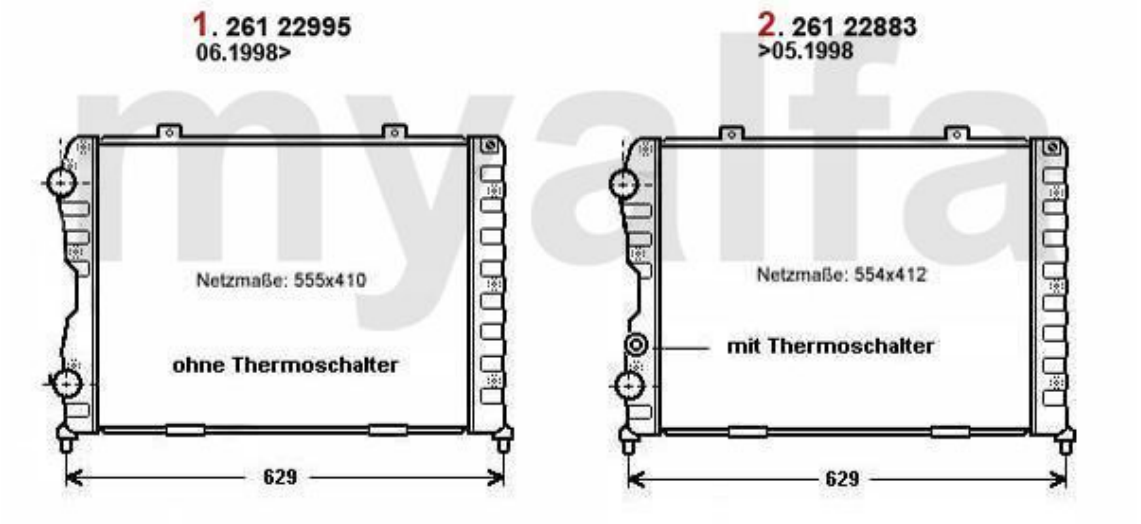

1	*26122995*	*OE. 71752882 RADIATOR*	*€303.78*
2	*26122883*	*OE. 71737158 RADIATOR*	*€234.45*

Thermostat gtv/spider (916) 3.0 V6



1	*26357187*	*OE. 60563989 THERMOTAT*	*€66.39*
2	*26314637*	*THERMOSTAT INLAY FOR VARIOUS V6 MOTORS*	*€29.33*

Wasserpumpe/Waterpump gtv/spider (916) 3.0 V6

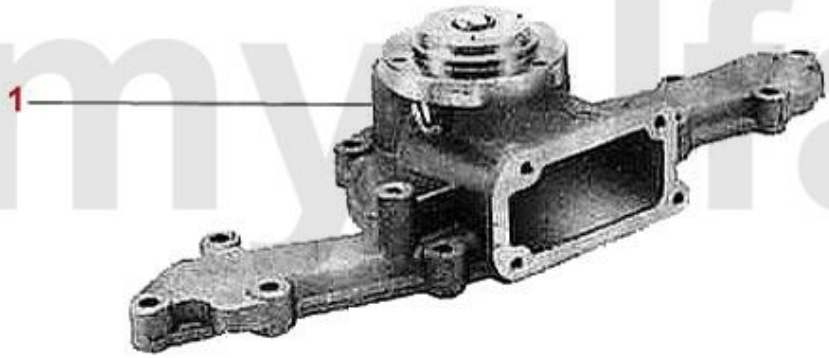

1	*2621110*	*OE. 60668488 WATERPUMP 155 2.5 V6,164/ 916 3.0 V6*	*€74.79*

Motorkühler/Radiator gtv/spider (916) V6 24V

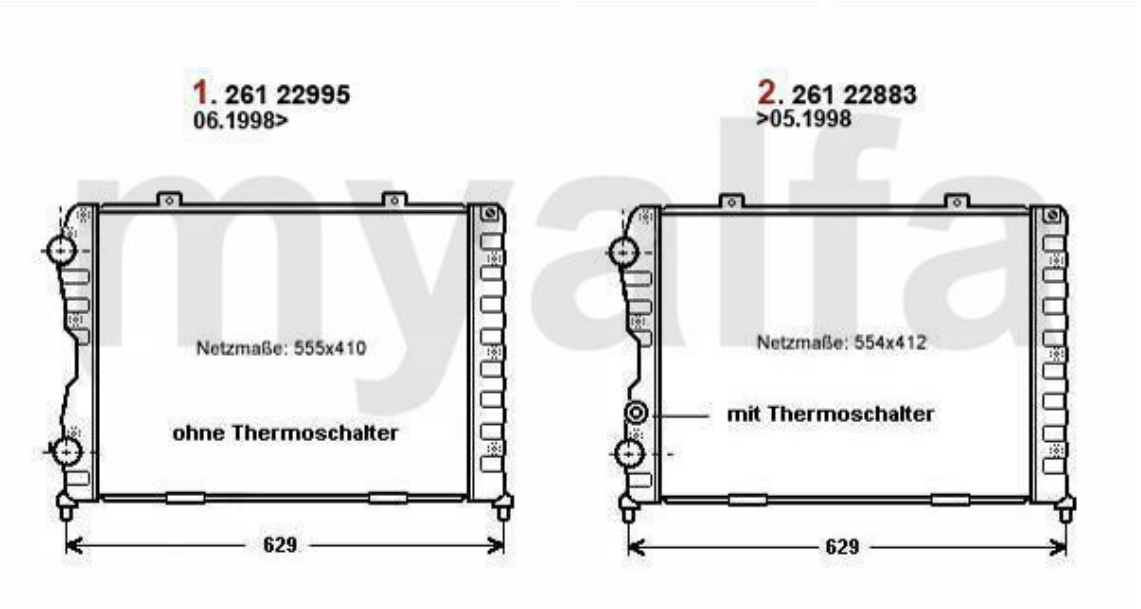

1	*26122995*	*OE. 71752882 RADIATOR*	*€303.78*
2	*26122883*	*OE. 71737158 RADIATOR*	*€234.45*

Thermostat gtv/spider (916) V6 24V



1	*26352403*	*OE. 60652403 THERMOSTAT 3.2 V6 24V/GTA*	*€74.79*
2	*26314637*	*THERMOSTAT INLAY FOR VARIOUS V6 MOTORS*	*€29.33*

Wasserpumpe/Waterpump gtv/spider (916) V6 24V

1. 262 81355



1	*26281355*	*OE. 60816018 WATERPUMP V6 24V*	*€132.77*



1 ***26583517*** ***OE. 60583517 SUBTANK*** ***€107.56***

Motorlager/Enginemount gtv/spider (916) 1.8/2.0 TS

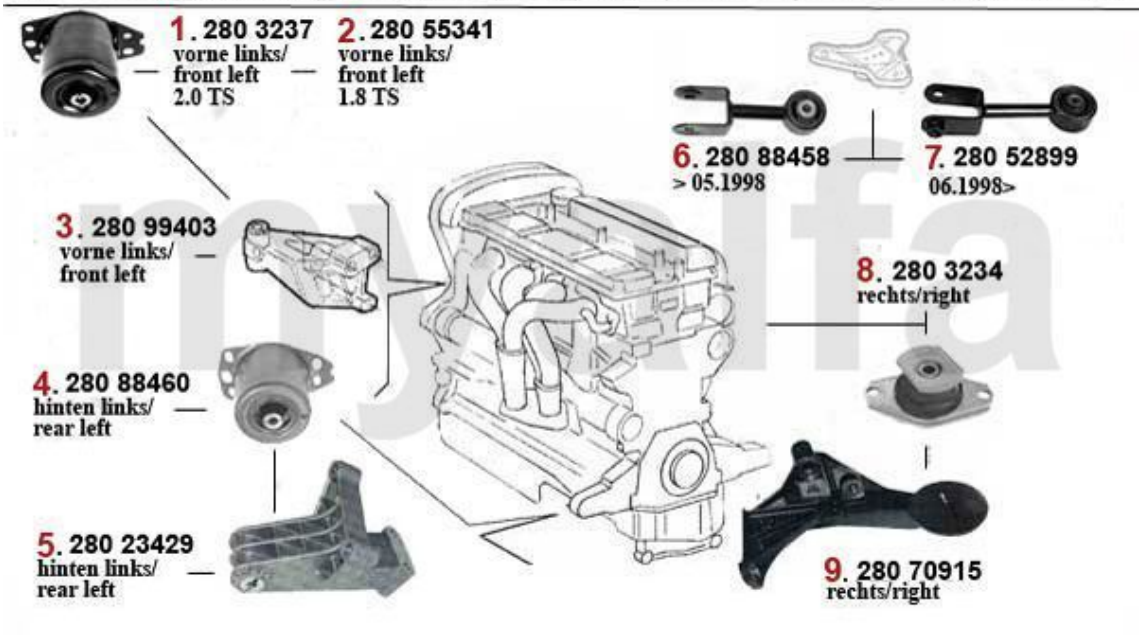

1	2803237	ENGINE MOUNT OE.60805961 145/6,155 all TS 16V & 6-CYLINDER, (916) 4-CYLINDER	On request
2	28055341	OE. 60655341 ENGINE MOUNT FL 156, gtv/spider (916) 1.8 TS	On request
3	28099403	OE. 60672234/60599403 ENGINE MOUNT	€158.82
4	28088460	OE. 7782435 ENGINEMOUNT	€167.23
5	28023429	OE. 46423429 SUPPORT	€91.60
6	28088458	Motorzugstange 145/6,155 gtv/spider (916) 2.0 TS 16V	On request
7	28052899	OE. 60652899 ENGINE MOUNT 145/6 2.0 TS, 147 all,156, gtv/spider (916) 1998>, Nuovo	€142.02
8	2803234	OE. 7652240/60808861 ENGINE MOUNT	€66.81
9	28070915	OE. 7770915 SUPPORT	€268.07

Motorlager/Enginemount gtv/spider (916) 2.0 JTS

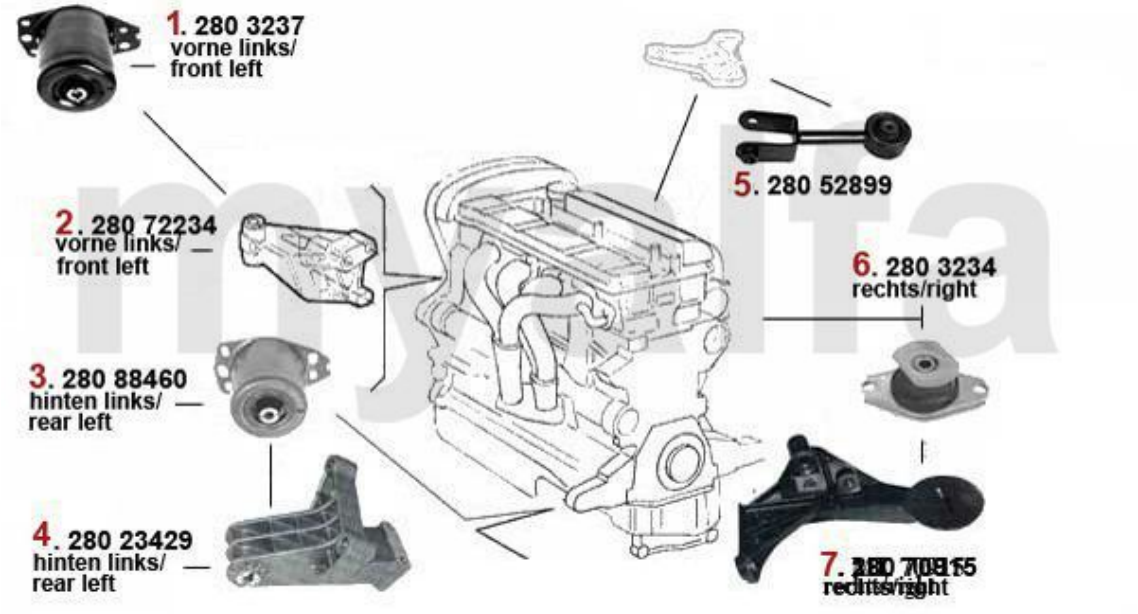

1	2803237	ENGINE MOUNT OE.60805961 145/6,155 all TS 16V & 6-CYLINDER, (916) 4-CYLINDER	On request
2	28072234	OE. 60672234 ENGINEMOUNT FR. 156 2002>, gtv/spider (916) 1998>, Nuovo GT TS 16V	€60.50
3	28088460	OE. 7782435 ENGINEMOUNT	€167.23
4	28023429	OE. 46423429 SUPPORT	€91.60
5	28052899	OE. 60652899 ENGINE MOUNT 145/6 2.0 TS, 147 all,156, gtv/spider (916) 1998>, Nuovo	€142.02
6	2803234	OE. 7652240/60808861 ENGINE MOUNT	€66.81
7	28070915	OE. 7770915 SUPPORT	€268.07

Motorlager/Enginemount gtv/spider (916) 2.0 V6 Turbo



1	28051417	OE. 60651417 ENGINEMOUNT gtv/spider (916) 2.0 V6 Turbo	€172.69
2	28062252	OE. 60562252 ENGINE ROD	On request
3	28024883	OE. 60624883 ENGINEMOUNT RR gtv/spider (916) 2.0 V6 Turbo	€241.60
4	2809507	OE. 60609507 ENGINEMOUNT rear downside gtv/spider (916) 2.0	€64.62

Motorlager/Enginemount gtv/spider (916) 3.0 V6



1	28051417	OE. 60651417 ENGINEMOUNT gtv/spider (916) 2.0 V6 Turbo	€172.69
2	28062252	OE. 60562252 ENGINE ROD	On request
3	28024883	OE. 60624883 ENGINEMOUNT RR gtv/spider (916) 2.0 V6 Turbo	€241.60
4	2809507	OE. 60609507 ENGINEMOUNT rear downside gtv/spider (916) 2.0	€64.62

Motorlager/Enginemount gtv/spider (916) V6 24V



1	*28051417*	*OE. 60651417 ENGINEMOUNT gtv/spider (916) 2.0 V6 Turbo*	*€172.69*
2	*28056136*	*OE. 60656136 ENGINEROD gtv/spider (916) V6 24V*	*On request*
3	*28024883*	*OE. 60624883 ENGINEMOUNT RR gtv/spider (916) 2.0 V6 Turbo*	*€241.60*
4	*2809507*	*OE. 60609507 ENGINEMOUNT rear downside gtv/spider (916) 2.0*	*€64.62*

Nockenwelle/Camshaft gtv/spider (916) TS 16V



1	222551	OE. 60600551 CAMSHAFT	€360.50
2	23355300	SHAFT SEAL CAMSHAFT 145/6,15 5,156 1.6,1.7,1.8,2.0 16V TS	€15.04
3	2338200	OE. 71753052 SEALING GASKET	€14.71
4	2221213	OE. 60601213 CAMSHAFT	€360.50

Ventiltrieb/Valve Train gtv/spider (916) TS 16V



1	22412769	OE.46787055 HYDRAULIC VALVE LIFTER	€15.00
2	22311582	Ventilführung Auslass + 0.05 TS 16V	€17.73
3	22391934	OE. 60674496 EXHAUST VALVE	On request
4	22391933	OE. 7766564 INTAKE VALVE	€13.36
5	22311575	Ventilführung Einlass +0.05 TS16V	€17.73

Zahnriemen/Timing Belt gtv/spider (916) TS 16V



1	24194590	OE. 71719648 TIMING BELT	€41.93
2	24255851	OE. 60671573 DEFLECTION PULLEY 1.8 TS 16V 145/6, 147,	€28.15
3	24255835	OE. 55192239 IDLER PULLEY 1.8 TS 16V 145/6, 147, 155, 156, 166, gtv/spider (916)	€68.91
4	25666199	OE. 71738360/55202772 ADVANCE VARIATOR TS 16V	On request
5	24194591	OE. 60620887 TIMING BELT	€57.98
6	24194715	OE. OE. 7722331 TIMING BELT	€88.99
7	24220443	OE. 55221254 TENSION PULLEY	€33.19

Nockenwelle/Camshaft gtv/spider (916) JTS



1	22286235	OE. 55186235 CAMSHAFT INTAKE 2.0 JTS	€545.38
2	23355300	SHAFT SEAL CAMSHAFT 145/6,15 5,156 1.6,1.7,1.8,2.0 16V TS	€15.04
3	2338200	OE. 71753052 SEALING GASKET	€14.71
4	22277853	OE. 60677853 CAMSHAFT EXHAUST 2.0 JTS	€664.62

Ventiltrieb/Valve Train gtv/spider (916) JTS



1	22412769	OE.46787055 HYDRAULIC VALVE LIFTER	€15.00
2	22311582	Ventilführung Auslass + 0.05 TS 16V	€17.73
4	22391934	OE. 60674496 EXHAUST VALVE	On request
5	22311575	Ventilführung Einlass +0.05 TS16V	€17.73
5	22391933	OE. 7766564 INTAKE VALVE	€13.36

Zahnriemen/Timingbelt gtv/spider (916) JTS



1	24194590	OE. 71719648 TIMING BELT	€41.93
2	24255851	OE. 60671573 DEFLECTION PULLEY 1.8 TS 16V 145/6, 147,	€28.15
3	24255850	Spannrolle Zahnriemen 145/6 1.4 ie 16V TS,155/6 1.6 ie 16V TS/2.0 JTS/ gtv/spider (916) 2.	€64.87
4	25666199	OE. 71738360/55202772 ADVANCE VARIATOR TS 16V	On request
5	24194591	OE. 60620887 TIMING BELT	€57.98
6	24220443	OE. 55221254 TENSION PULLEY	€33.19



1	2222873	OE. 60602873 CAMSHAFT	On request
2	2222874	OE. 60602874 CAMSHAFT	On request

Ventiltrieb/Valve Train gtv/spider (916) 2.0 V6 Turbo

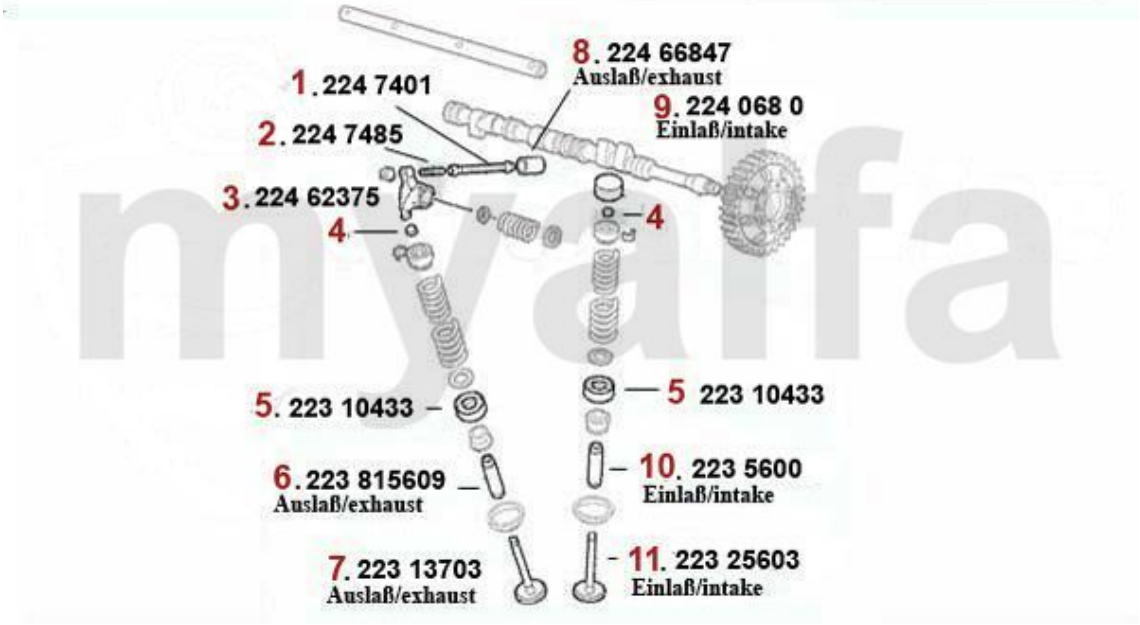

1	2247401	PUSH ROD (EXHAUST-SIDE) 75 ,155 164,166,RZ,SZ,GTV/SPIDER (916),GTV/ 6	€116.81
2	2247485	OE. 60507485 ADJUSTING SCREW ROCKER ARM SHAFT, 75, 155, 164, 166, RZ, SZ, GTV/Spider (916), GTV6	€2.94
4	2431140	SET VALVE SHIMS 200 PIECES 2,525 - 3,5 mm, DIAMETER 9mm	€469.75
4	2430840	SET VALVE SHIMS 205 PIECES 1,5 - 2,5 mm, DIAMETER 9mm	€469.75
4	2430430	VALVE SHIM 9MM PLEASE SUBMIT THE SIZE YOU NEED	€10.42
5	22310433	OE. 60601088/60810433 VALVE CUP	On request
6	22315609	OE. 60605721 EXHAUST VALVE GUIDE 6-CYLINDER 116, STEEL	€11.68
7	22313703	OE. 60513707 VALVE EXHAUST	On request
8	22466847	OE. 60566847 CAM FOLLOWER	€22.10
9	2240680	CAM FOLLOWER OE-QUALITY 101/105/115/116/75/155/164	€16.39
10	2235600	OE. 60605725 Valve Giude	€13.36
11	22325603	OE. 60625603 VALVE INTAKE 2.0	€55.04

Zahnriemen/Timing Belt gtv/spider (916) 2.0 V6 Turbo



1	2281370	WEDGE CAMSHAFT	€11.34
2	24194411	OE. 60500466 TIMINGBELT V6 12V 1992>	€27.31
3	24210451	OE. 60588421 BELT TENSIONER MECHANIC.	€102.10

Nockenwelle/Camshaft gtv/spider 3.0 V6 12V



1	*2223785*	*Nockenwelle rechts gtv/spider (916) 3.0 V6 (nicht 24V)*	*On request*
2	*2223786*	*OE. 60603786 CAMSHAFT*	*On request*

Ventiltrieb/Valve Train gtv/spider (916) 3.0 V6 12V



1	2247401	PUSH ROD (EXHAUST-SIDE) 75 ,155 164,166,RZ,SZ,GTV/SPIDER (916),GTV/ 6	€116.81
2	2247485	OE. 60507485 ADJUSTING SCREW ROCKER ARM SHAFT, 75, 155, 164, 166, RZ, SZ, GTV/Spider (916), GTV6	€2.94
4	2431140	SET VALVE SHIMS 200 PIECES 2,525 - 3,5 mm, DIAMETER 9mm	€469.75
4	2430840	SET VALVE SHIMS 205 PIECES 1,5 - 2,5 mm, DIAMETER 9mm	€469.75
4	2430430	VALVE SHIM 9MM PLEASE SUBMIT THE SIZE YOU NEED	€10.42
5	22310433	OE. 60601088/60810433 VALVE CUP	On request
6	22315609	OE. 60605721 EXHAUST VALVE GUIDE 6-CYLINDER 116, STEEL	€11.68
7	22356118	OE. 60512984 EXHAUST VALVE	€29.33
8	22466847	OE. 60566847 CAM FOLLOWER	€22.10
9	2240680	CAM FOLLOWER OE-QUALITY 101/105/115/116/75/155/164	€16.39
10	2235600	OE. 60605725 Valve Giude	€13.36
11	22356117	OE. 60512982 INTAKE VALVE	€41.09

Zahnriemen/Timing Belt gtv/spider (916) 3.0 V6 12V



1	2281370	WEDGE CAMSHAFT	€11.34
2	24194411	OE. 60500466 TIMINGBELT V6 12V 1992>	€27.31
3	24210451	OE. 60588421 BELT TENSIONER MECHANIC.	€102.10

Nockenwelle/Camshaft gtv/spider (916) 3.0/3.2 V6 24V

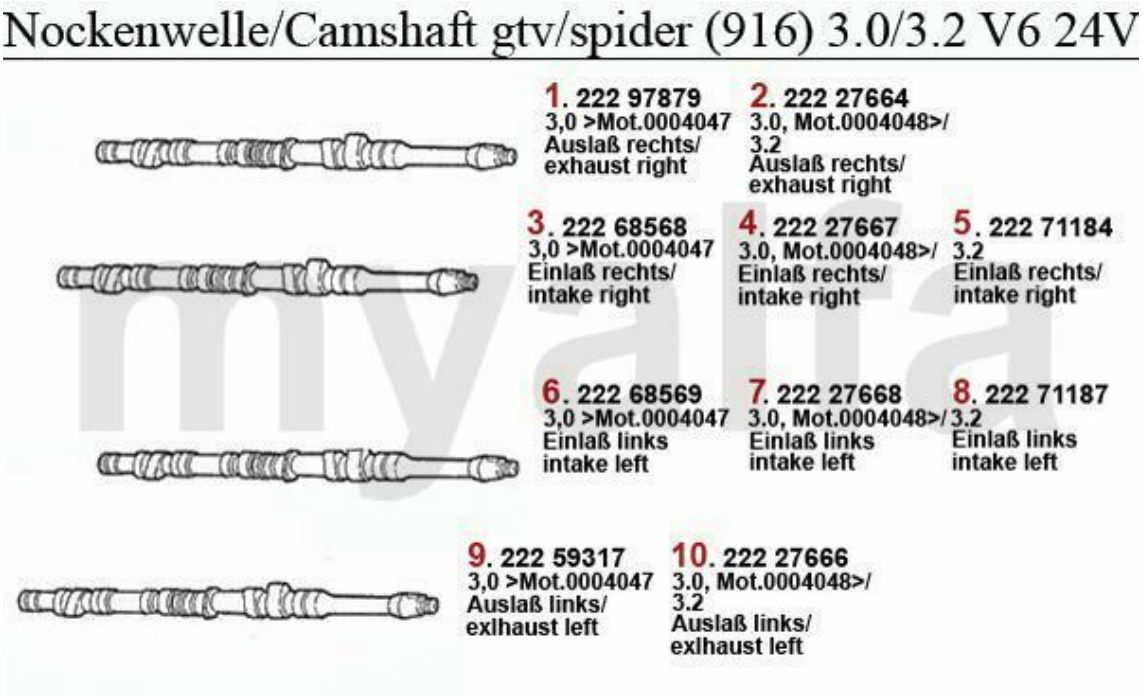

1	*22297879*	*CAMSHAFT RIGHT (EXHAUST) 166, GTV (916) > ENGIN NO. #5627*	*€293.28*
2	*22227664*	*OE. 60627664 CANSHAFT*	*€516.81*
3	*22268568*	*RIGHT CAMSHAFT (INLET) 164 SUPER 3.0 V6 24V, GTV(916)>MOT #5627*	*On request*
4	*22227667*	*OE. 60627667 CAMSHAFT RIGHT*	*On request*
5	*22271184*	*OE. 60671184 Camshaft R Intake 3.2 V6 24V*	*On request*
6	*22268569*	*Nockenwelle links (Einlass) 164 Super,166,gtv (916) > Mot #5627*	*€197.48*
7	*22227668*	*OE. 60627668 CAMSHAFT LEFT*	*€242.86*
8	*22271187*	*OE. 60671187 Camshaft R Intake 3.2 V6 24V*	*€983.11*
9	*22259317*	*Nockenwelle links (Aulaß) 164 Super ,166,gtv (916) > Mot #5627*	*€256.30*
10	*22227666*	*OE. 60627666 CANSHAFT*	*On request*

Ventiltrieb/Valve Train gtv/spider (916) V6 24V

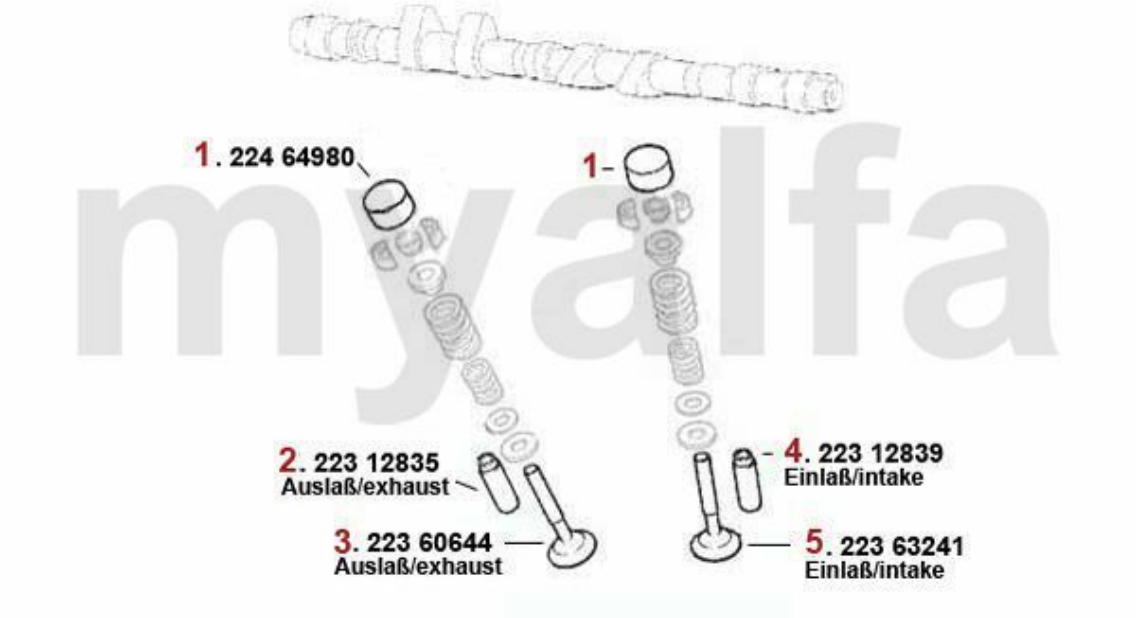

1	22464980	OE. 6066480 VALVE TAPPET	€29.33
2	22312835	OE. 60612835 VALVE GUIDE	€27.31
3	22360644	Exhaust Valve 3.0/3.2 24V	€25.13
4	22312839	OE. 60605120 VALVE GUIDE	€27.31
5	22363241	OE.60560643 INTAKE VALVE 3.0 V6 24V/3.2 GTA,147,156,164, 166, SPIDER/GTV (916),NUOVO GT	€24.37

Zahnriemen/Timing Belt gtv/spider (916) V6 24V



1	24194741	OE. 60674528 TIMING BELT	€100.00
2	24255875	OE. 55196536 BELTSTRETCHER	€125.21
3	24255876	OE. 60603056 IDLE PULLEY	€74.79



1 ***2212475*** ***OE. 60778673 PISTON/LINER 3.0 12V, QV DESIGN*** ***€138.66***

Filter gtv/spider (916) 1.8/2.0 TS



1	291352	OIL FILTER GTV/SPIDER (916) TSOE. 60810852	€8.32
2	291519	OE. 46808398/71736159 OILFILTER	€8.32
3	29293	OE. 60811342 AIR FILTER	€25.13
4	29386	OE. 60506968 FUEL FILTER	€24.79
5	294309	Innenraumfilter 145/6,155 >96 GTV/Spider (916) Bj. >98,eckig	€15.55
6	294314	OE. 46721923 CABIN FILTER	€14.04

Filter gtv/spider (916) 2.0 JTS



1	*291519*	*OE. 46808398/71736159 OILFILTER*	*€8.32*
2	*29293*	*OE. 60811342 AIR FILTER*	*€25.13*
3	*294309*	*Innenraumfilter 145/6,155 >96 GTV/Spider (916) Bj. >98,eckig*	*€15.55*

Filter gtv/spider (916) 2.0 V6 Turbo



1	*291124*	*OE. 46805830 Oilfilter*	*€13.36*
2	*292280*	*OE. 71736139 AIR FILTER*	*€14.71*
3	*29386*	*OE. 60506968 FUEL FILTER*	*€24.79*
4	*294314*	*OE. 46721923 CABIN FILTER*	*€14.04*

Filter gtv/spider (916) 3.0 V6

Oelfilter/Oilfilter

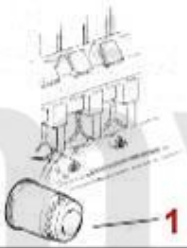

Luftfilter/Airfilter



Kraftstofffilter/Fuelfilter



Innenraumfilter/Indoorfilter

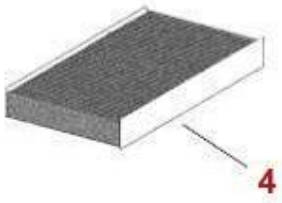

1	*291124*	*OE. 46805830 Oilfilter*	*€13.36*
2	*29293*	*OE. 60811342 AIR FILTER*	*€25.13*
3	*29386*	*OE. 60506968 FUEL FILTER*	*€24.79*
4	*294314*	*OE. 46721923 CABIN FILTER*	*€14.04*

Filter gtv/spider (916) 3.0/3.2 V6 24V/GTA



1	*291124*	*OE. 46805830 Oilfilter*	*€13.36*
2	*292350*	*OE. 60623350 AIR FILTER*	*€44.45*
3	*29386*	*OE. 60506968 FUEL FILTER*	*€24.79*
4	*294314*	*OE. 46721923 CABIN FILTER*	*€14.04*

Abgasanlage/Exhaust System gtv/spider (916) 1.8/2.0 TS



SPIDER / GTV 16V TWIN SPARK 1.8i/2.0i • 2.0 (EURO 3) (02/02-) '95-

1	33202101	PRE-SILENCER SPIDER/GTV (916) 1.8 2.0 TS 1995> 145/6,155 2.0 16V TS 1995-96	€173.95
2	32174780	OE. 60674780 EXHAUST PIPE CATALIZED gtv/spider (916) 2.0 TS > #7014390 "VERSION: ""	€1,168.07
2	32178256	OE. 60678256 EXHAUST PIPE CATALIZED gtv/spider (916) 2.0 TS CF3 > #7014390 "VERSION	€1,420.17
2	32193204	OE. 55193204 EXHAUST PIPE CATALIZED GTV/SPIDER (916) 2.0 TS CF3 #7014390>	On request
3	32113133	OE. 60611770/2 CATALYSATOR	€294.12
4	32167547	OE.60667547 SILENCER CATALIZED gtv/spider (916)	On request
5	34102103	FRONT EXHAUST SECTION gtv/spider (916) 1.8/2.0 TS	€100.76
6	34102106	OE. 71765101 MIDDLE SILENCER	€142.20
7	35102109	OE. 60613779 REAR SILENCER	€181.43
8	38094474	OE. 46772217 GASKET	€10.50
9	38094487	7783718 GASKET	€4.54
10	38091012	OE. 60573784 RUBBER RING	€2.10
11	38094003	OE. 82407147 GASKET	€8.82
12	38091143	OE. 60811640 / 60816516 EXHAUST RUBBER	€4.12
13	38091014	OE.60807479 EXHAUST RUBBER MOUNT	€5.46

Abgasanlage/Exhaust System gtv/spider (916) 2.0 JTS

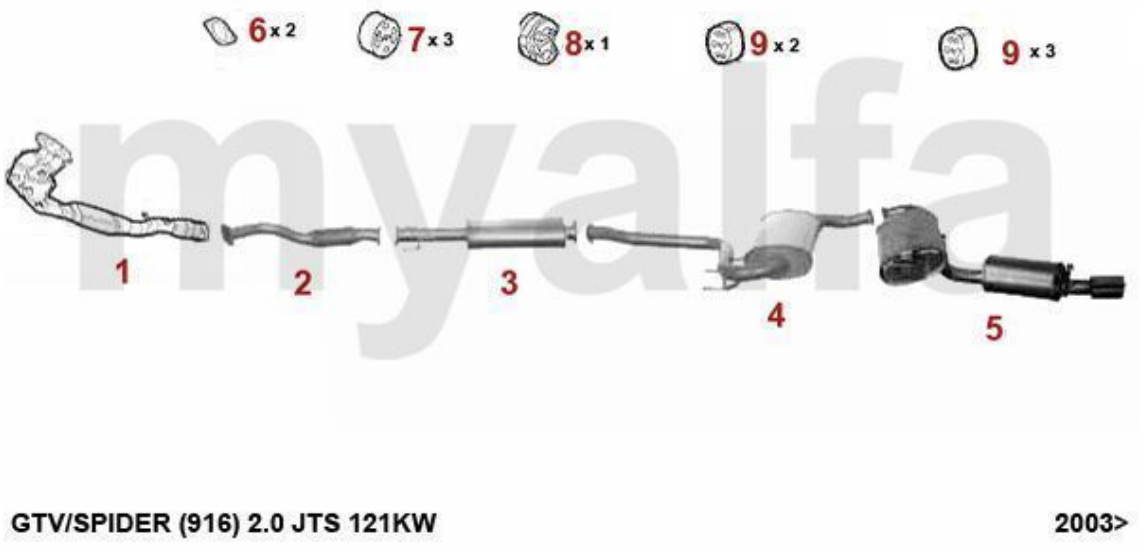

GTV/SPIDER (916) 2.0 JTS 121KW 2003>

1	32184599	OE. 55184589 EXHAUST PIPE CATALIZED gtv/spider (916)	€1,679.83
2	33116545	FRONT EXHAUST SECTION 156/gtv/spider (916)/ Nuovo GT 2.0 JTS	€121.85
3	32183428	OE. 55183428 SILENCER CATALIZED gtv/spider (916)	On request
4	34183429	OE. 55183429 MIDDLE SILENCER gtv/spider (916) 2.0 JTS	On request
5	35183431	OE. 55183431 REAR SILENCER gtv/spider (916) 2.0 JTS	€356.30
6	38094484	OE. 73503584 GASKET	€10.50
7	38091143	OE. 60811640 / 60816516 EXHAUST RUBBER	€4.12
9	38091014	OE.60807479 EXHAUST RUBBER MOUNT	€5.46

Abgasanlage/Exhaust System gtv/spider (916) 2.0 V6 Turbo



spider/gtv 2.0 V6 Turbo 148 KW **1995>**

1	33154442	OE. 60654442 EXHAUST PIPE CATALIZED gtv/spider (916)	On request
1	33156242	OE.60656242 EXHAUST PIPE CATALIZED gtv/spider (916)	On request
2	32156116	OE. 60656116 SILENCER CATALIZED gtv/spider (916)	€895.71
2	32102233	OE. 60583950 KATALYSATOR gtv/spider (916) V6 3.0 12/24V CF2, 2.0 V6 Turbo CF2 >	On request
2	32153561	OE. 60653561 SILENCER CATALIZED gtv/spider V6	On request
3	34102106	OE. 71765101 MIDDLE SILENCER	€142.20
4	35102207	OE. 60615199 REAR SLINCER 916 V6 TURBO	€184.45
5	35102109	OE. 60613779 REAR SILENCER	€181.43
6	38073540	OE. 60573540 GASKET FOR FRONTPIPE	€5.80
7	38094003	OE. 82407147 GASKET	€8.82
8	38091143	OE. 60811640 / 60816516 EXHAUST RUBBER	€4.12
9	38091014	OE.60807479 EXHAUST RUBBER MOUNT	€5.46

Abgasanlage/Exhaust System gtv/spider (916) 3.0 V6 12V



SPIDER 3.0i V6 12V / GTV 3.0i '95-

3	32102233	OE. 60583950 KATALYSATOR gtv/spider (916) V6 3.0 12/24V CF2, 2.0 V6 Turbo CF2 >	On request
3	32153561	OE. 60653561 SILENCER CATALIZED gtv/spider V6	On request
4	34102106	OE. 71765101 MIDDLE SILENCER	€142.20
5	35102109	OE. 60613779 REAR SILENCER	€181.43
6	38094414	O.E. 60510306 GASKET	€3.53
7	38009014	OE. 60574953 MOUNT	On request
9	38073540	OE. 60573540 GASKET FOR FRONTPIPE	€5.80
10	38094003	OE. 82407147 GASKET	€8.82
11	38091143	OE. 60811640 / 60816516 EXHAUST RUBBER	€4.12
12	38091014	OE.60807479 EXHAUST RUBBER MOUNT	€5.46

Abgasanlage/Exhaust System gtv/spider (916) 3.0 V6 24V

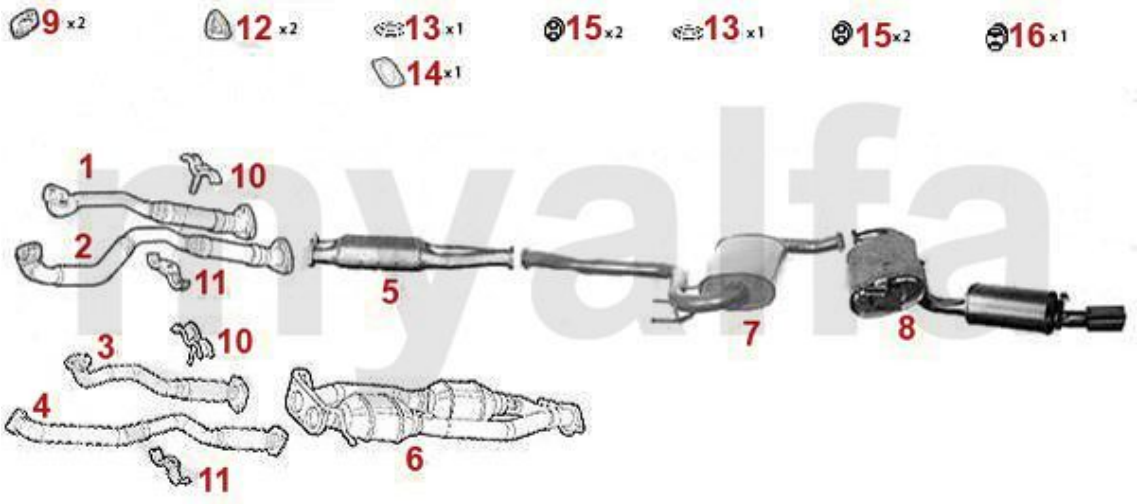

gtv/spider (916) 3.0 V6 24V '95-

1	33120490	OE. 60620490 EXHAUST PIPE gtv (916) 3.0 V6 24V 1995-98	On request
1	33156119	OE. 60656119 EXHAUST PIPE gtv (916) 3.0 V6 24V 1998>	On request
2	33158028	OE. 60658028 EXHAUST PIPE gtv (916) V6 24V	€427.73
3	33169658	OE. 60669658 EXHAUST PIPE FR 147 GTA	On request
4	33169659	OE. 60669659 EXHAUST PIPE FL 147 GTA	€510.92
5	32102233	OE. 60583950 KATALYSATOR gtv/spider (916) V6 3.0 12/24V CF2, 2.0 V6 Turbo CF2 >	On request
6	32170380	OE. 60670380 KATALYSATOR gtv/spider (916) 3.0/3.2 V6	€894.87
7	34102106	OE. 71765101 MIDDLE SILENCER	€142.20
8	35102109	OE. 60613779 REAR SILENCER	€181.43
9	38054239	OE. 60654239 GASKET	€10.50
10	38009014	OE. 60574953 MOUNT	On request
11	38009013	OE. 60573666 MOUNT	On request
12	38073540	OE. 60573540 GASKET FOR FRONTPIPE	€5.80
13	38094003	OE. 82407147 GASKET	€8.82
14	38094484	OE. 73503584 GASKET	€10.50
15	38091143	OE. 60811640 / 60816516 EXHAUST RUBBER	€4.12
16	38091014	OE.60807479 EXHAUST RUBBER MOUNT	€5.46

Abgasanlage/Exhaust System gtv/spider (916) 3.2 V6 24V/GTA

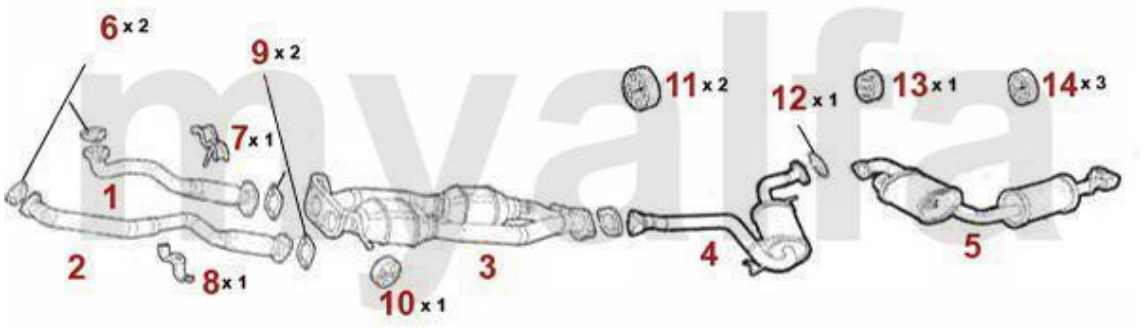

GTV/SPIDER (916) 3.2 V6 24V/GTA 2003>

1	33169658	OE. 60669658 EXHAUST PIPE FR 147 GTA	On request
2	33169659	OE. 60669659 EXHAUST PIPE FL 147 GTA	€510.92
3	32170380	OE. 60670380 KATALYSATOR gtv/spider (916) 3.0/3.2 V6	€894.87
4	34184807	OE. 55184807 MIDDLE SILENCER gtv/spider (916) 3.2 V6 24V	On request
5	35184808	OE. 55184808 REAR SILENCER gtv/spider (916) 3.2 V6 24V	On request
6	38054239	OE. 60654239 GASKET	€10.50
7	38009014	OE. 60574953 MOUNT	On request
8	38009013	OE. 60573666 MOUNT	On request
9	38073540	OE. 60573540 GASKET FOR FRONTPIPE	€5.80
11	38091031	OE. 60573198 / 60615734 RUBBER/EXHAUST MOUNT 164 Super Turbo	€3.78
12	38094484	OE. 73503584 GASKET	€10.50
13	38091014	OE.60807479 EXHAUST RUBBER MOUNT	€5.46
14	38091143	OE. 60811640 / 60816516 EXHAUST RUBBER	€4.12

Lambda-Sonde/Lambda Probe gtv/spider (916) 1.8/2.0 TS

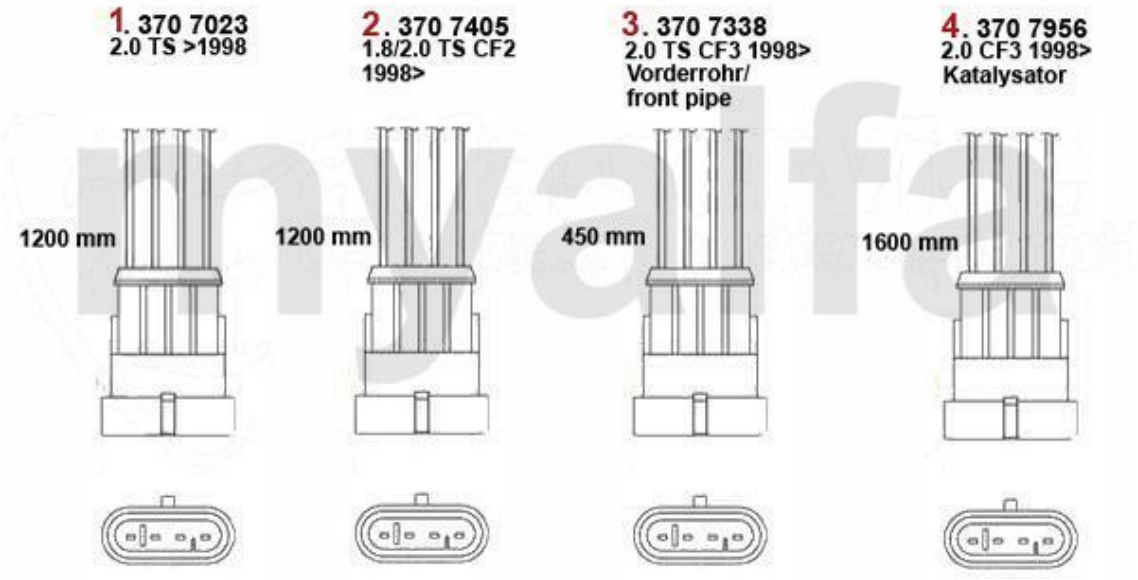

1	3707023	LAMBDA SENSOR 145/6 2.0 16V TSFROM 11.96>ON,156 1.6 16V TS> #0023373, 164 Super 2.0 TS/3.0	€114.20
2	3707405	OE. 46750246 LAMBDA PROBE	€111.26
3	3707338	OE: 46762182 LAMBDA PROBE	On request
4	3707956	Lambda-Sonde gtv/spider (916) 2.0 16V TS bj. 08.00>,4-adrig	€97.31

Lambda-Sonde/Lambda Probe gtv/spider (916) 2.0 JTS

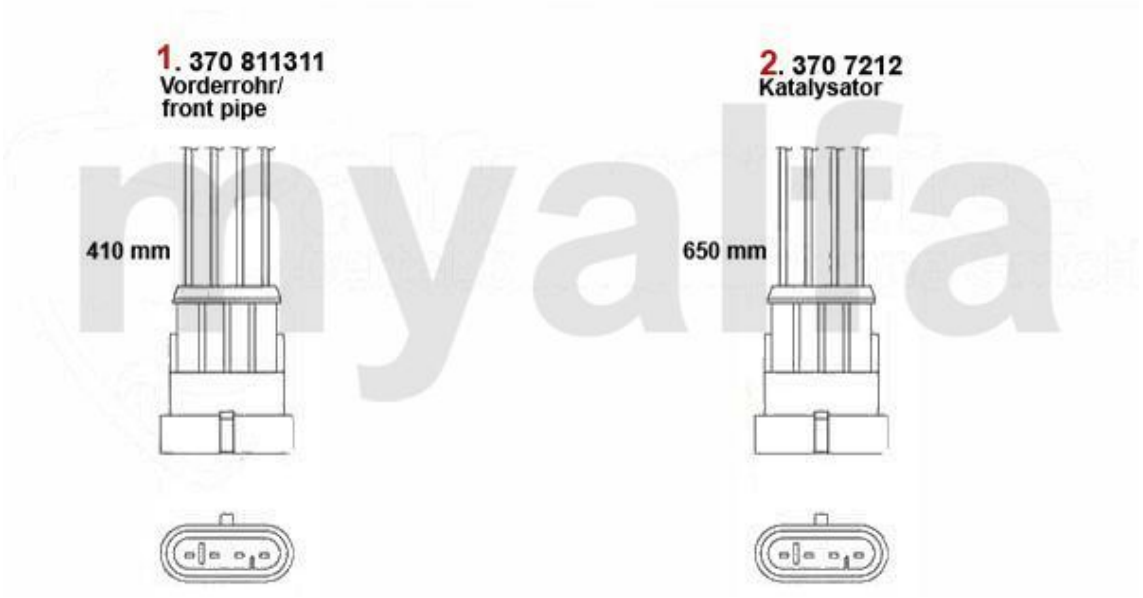

1	*37011311*	*OE. 46811311 LAMBDA PROBE 156, 166, gtv/spider (916), Nuovo GT 2.0 TS CF3/ JTS >05.2005*	*€125.21*
2	*3707212*	*OE. 46750243 LAMBDA PROBE*	*€100.00*

Lambda-Sonde/Lambda Probe gtv/spider (916) 2.0 V6 Turbo

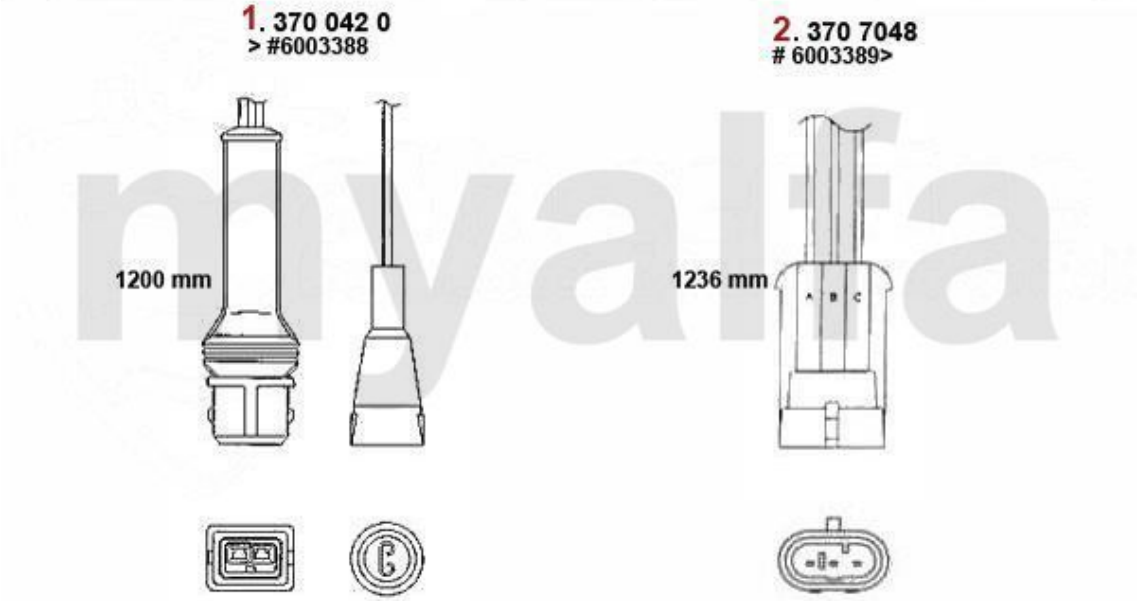

1	3700420	LAMBDA PROBE SPIDER 1990-93	€74.79
2	3707048	OE. 7785973 LAMBDA PROBE	€142.44

Lambda-Sonde/Lambda Probe gtv/spider (916) 3.0 V6 12V

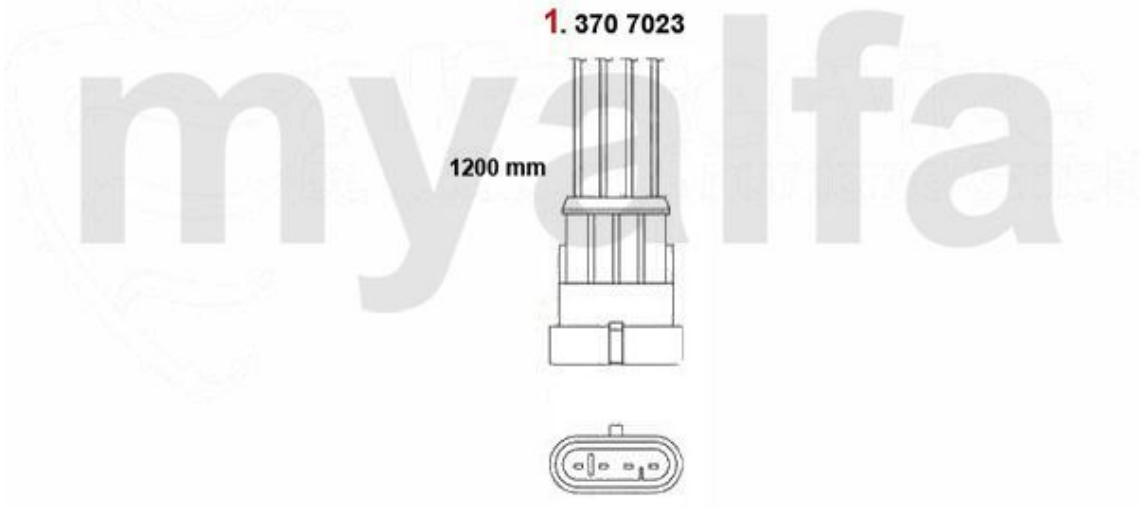

1	*3707023*	*LAMBDA SENSOR 145/6 2.0 16V TSFROM 11.96>ON,156 1.6 16V TS> #0023373, 164 Super 2.0 TS/3.0*	*€114.20*

Lambda-Sonde/Lambda Probe gtv/spider (916) 3.0 V6 24V

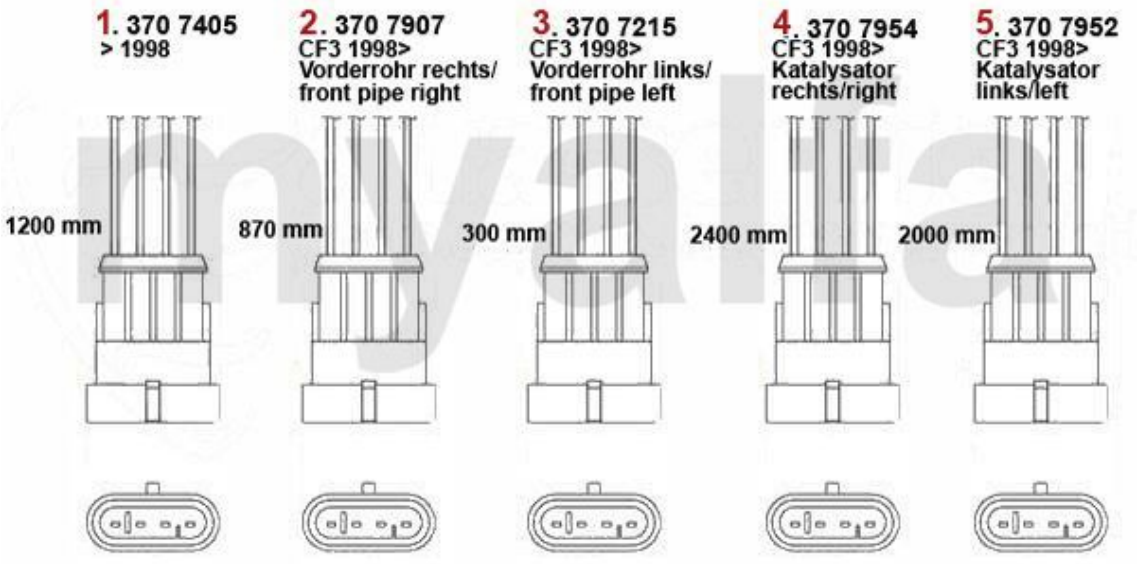

1	*3707405*	*OE. 46750246 LAMBDA PROBE*	*€111.26*
2	*3707907*	*OE. 46764207 LAMBDA PROBE*	*€116.81*
3	*3707215*	*Lambda-Sonde 147 1.6 16V TS ECO, 3.2 V6 24V GTA 166 2.5/3.0 V6 24 V, spider (916) 3.0 V6 b*	*€94.03*
4	*3707954*	*OE. 46805750 LAMBDA PROBE*	*€91.60*
5	*3707952*	*OE: 46805749 LAMDA PROBE*	*On request*

Lambda-Sonde/Lambda Probe gtv/spider (916) 3.02 V6 24V/GTA

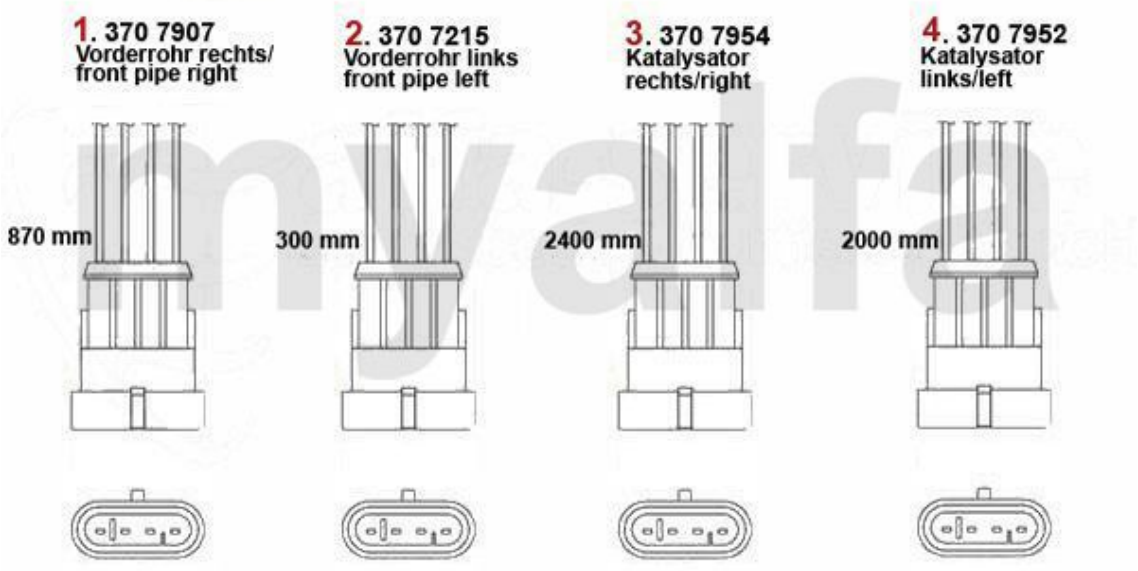

1	3707907	OE. 46764207 LAMBDA PROBE	€116.81
2	3707215	Lambda-Sonde 147 1.6 16V TS ECO, 3.2 V6 24V GTA 166 2.5/3.0 V6 24 V, spider (916) 3.0 V6 b	€94.03
3	3707954	OE. 46805750 LAMBDA PROBE	€91.60
4	3707952	OE: 46805749 LAMDA PROBE	On request

Antriebswelle/Driveshaft gtv/spider (916) 1.8/2.0 TS



1	46223838	OUTER JOINT SET 145/6, 155, GTV/Spider (916) 2.0 16V TS WITH ABS OE. 60605055	€137.14
2	46220994	OE. 60812760 OUTER JOINT SET	€130.25
3	46221150	OE. 60815370 OUTER JOINT SET	€125.21
4	46221241	INNER JOINT SET GTV/SPIDER (916), 155, 145/6 TS 16V, 156 TS 16V, 166 2.0 TS, 147 1.6/2.0 TS	€100.76
5	46323523	OE.60812755 BOOT SET ALFA 33, 145/6 155,164 ,gtv/spider (916)	€14.20
6	46326207	INNER CV BOOT GTV/SPIDER (916), 2.0 TS 1995-98, 155, 145/6, 166 6 CYLINDER O.E. 608	€18.91

Antriebswelle/Driveshaft gtv/spider (916) 2.0 JTS



1	46221150	OE. 60815370 OUTER JOINT SET	€125.21
2	46221241	INNER JOINT SET GTV/SPIDER (916), 155, 145/6 TS 16V, 156 TS 16V, 166 2.0 TS, 147 1.6/2.0 TS	€100.76
3	46323523	OE.60812755 BOOT SET ALFA 33, 145/6 155,164 ,gtv/spider (916)	€14.20
4	46326207	INNER CV BOOT GTV/SPIDER (916), 2.0 TS 1995-98, 155, 145/6, 166 6 CYLINDER O.E. 608	€18.91

Antriebswelle/Driveshaft gtv/spider (916) 2.0 V6 Turbo



1	46223839	Gelenksatz außen 155,gtv/spider (916) diverse mit ABS	€142.27
2	4627	Gelenksatz außen 145/6 1.9 JTD (77kw) mit/ohne ABS,155,gtv/spider (916) V6 # 6063041>	€105.63
3	46223845	OE. 46307210 INNER DRIVE SHAFT	On request
4	46326088	OE. 60556609 OUTER BOOT SET	€29.33
5	46326258	OE. 7548098 BOOT SET	€27.31

Antriebswelle/Driveshaft gtv/spider (916) 3.0 V6 12V



1	46223839	Gelenksatz außen 155,gtv/spider (916) diverse mit ABS	€142.27
2	4627	Gelenksatz außen 145/6 1.9 JTD (77kw) mit/ohne ABS,155,gtv/spider (916) V6 # 6063041>	€105.63
3	46223845	OE. 46307210 INNER DRIVE SHAFT	On request
4	46326088	OE. 60556609 OUTER BOOT SET	€29.33
5	46326258	OE. 7548098 BOOT SET	€27.31

Antriebswelle/Driveshaft gtv/spider (916) 3.0 V6 24V



1	46223839	Gelenksatz außen 155,gtv/spider (916) diverse mit ABS	€142.27
2	4627	Gelenksatz außen 145/6 1.9 JTD (77kw) mit/ohne ABS,155,gtv/spider (916) V6 # 6063041>	€105.63
3	46223845	OE. 46307210 INNER DRIVE SHAFT	On request
4	46326088	OE. 60556609 OUTER BOOT SET	€29.33
5	46326258	OE. 7548098 BOOT SET	€27.31

Antriebswelle/Driveshaft gtv/spider (916) 3.2 V6 24V



1	*4628174*	*OE. 46308174 HALF SHAFT 916 3.2 V6 24V*	*On request*
2	*46321142*	*OE. 46307733 BOOT SET 147,156,gtv/spider (916),Nuovo GT 3.2 V6 24V/GTA*	*€29.33*

Kupplungs-Kit/Clutch Set gtv/spider (916) 1.8/2.0 TS

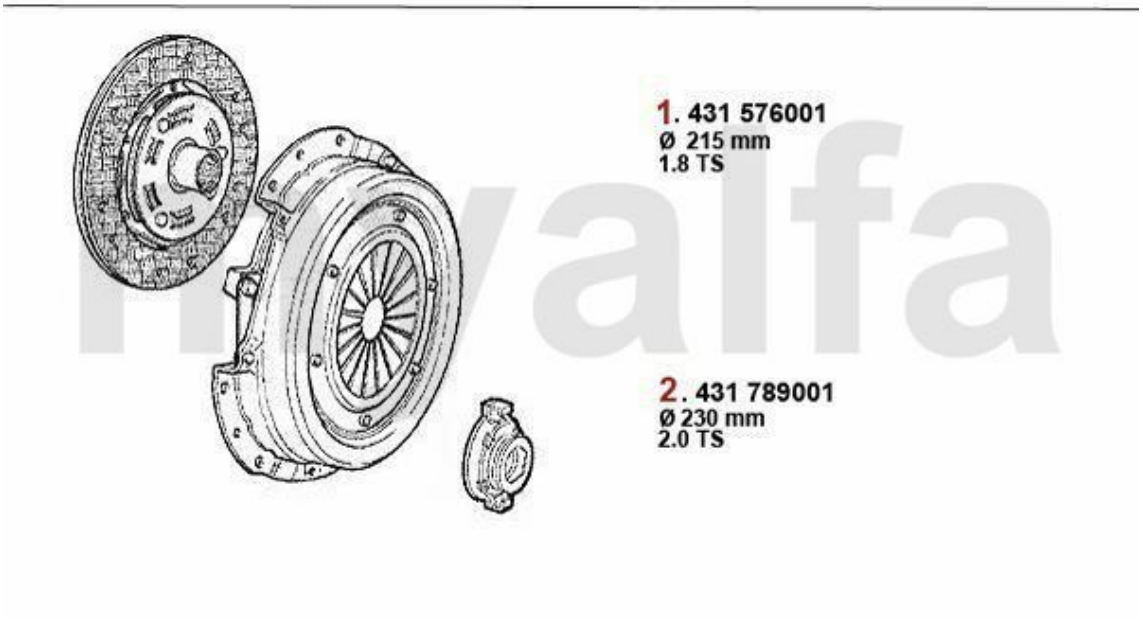

1	*43176001*	*Kupplungs-Kit 145/6 1.4/1.6/1.8 TS, gtv/spider (916)/155 1.6/1.8 TS 16V ,2.0 TS 8V Bj. 92-*	*€173.95*
2	*43189001*	*OE. 71734766 CLUTCH KIT 2.0 TS 16V 230 mm*	*€226.05*

Ausrücker/Sleeve Bearing gtv/spider (916) 1.8/2,0 TS

1. 439 1140

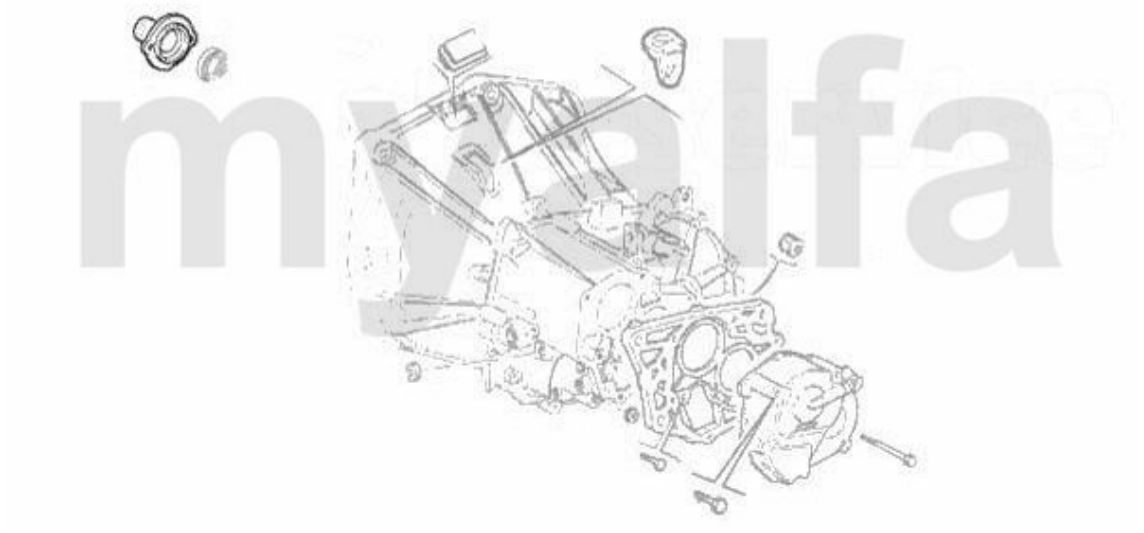

1	*4391140*	*OE. 46411139 MOUNT*	*€41.18*

Kupplungs-Kit/Clutch Set gtv/spider (916) 2.0 JTS

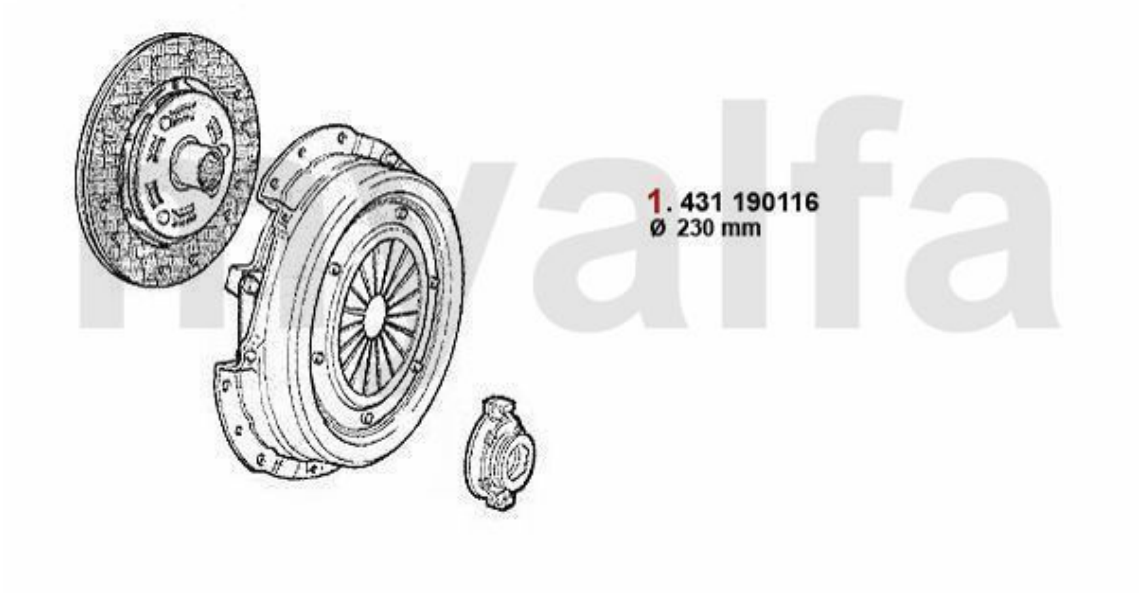

1	*43190116*	*OE. 55190116 KIT CLUTCH gtv/spider (916) 2.0 JTS (SELESPEED)*	*€266.39*

Ausrücker/Sleeve Bearing gtv/spider (916) 2.0 JTS

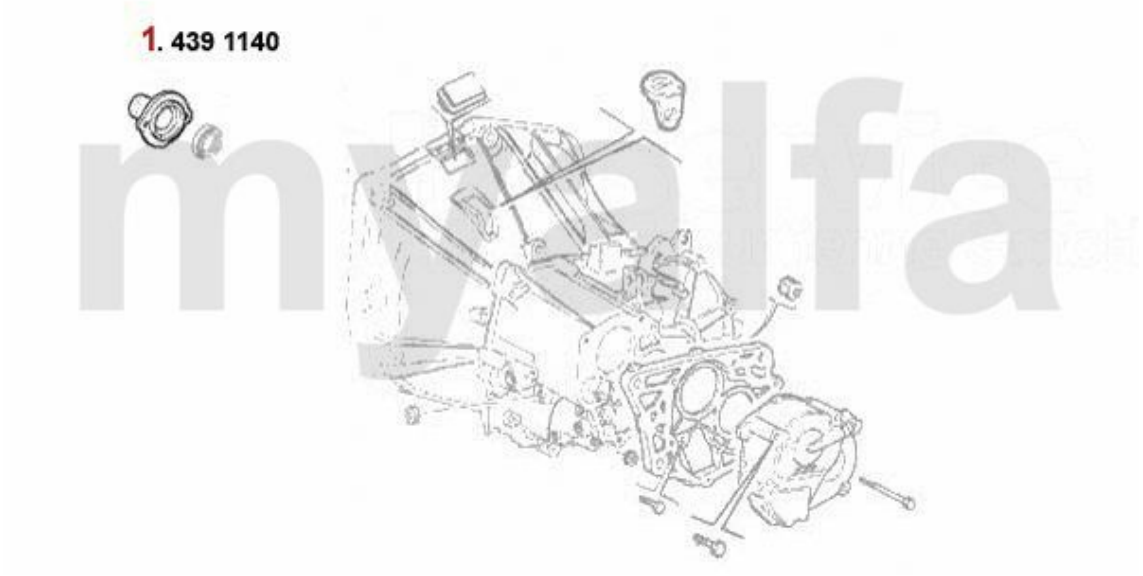

1	*4391140*	*OE. 46411139 MOUNT*	*€41.18*

Kupplungs-Kit/Clutch Set gtv/spider (916) 2.0 V6 Turbo

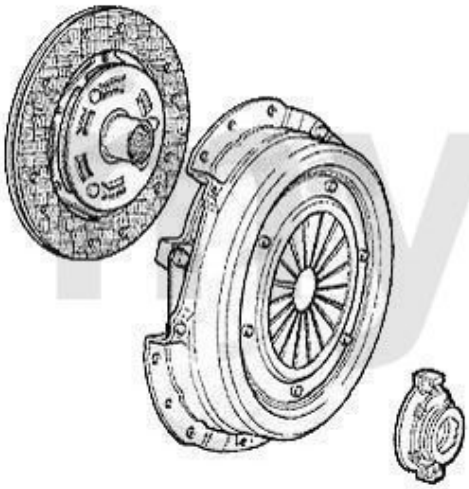

1. 431 790001
Ø 230 mm
gtv Bj >98

2. 431 727001
Ø 235 mm
gtv/spider Bj. 98>

1	*43190001*	*CLUTCH KIT SPIDER (916) 3.0 V6 FROM 06.1995-12.1998, GTV (916) 2.0 V6 TURBO FROM >98 ON*	*€256.30*
2	*43172701*	*OE. 71734944 CLUTCH KIT*	*€326.89*

Ausrücker/Sleeve Bearing gtv/spider (916) 2.0 V6 Turbo

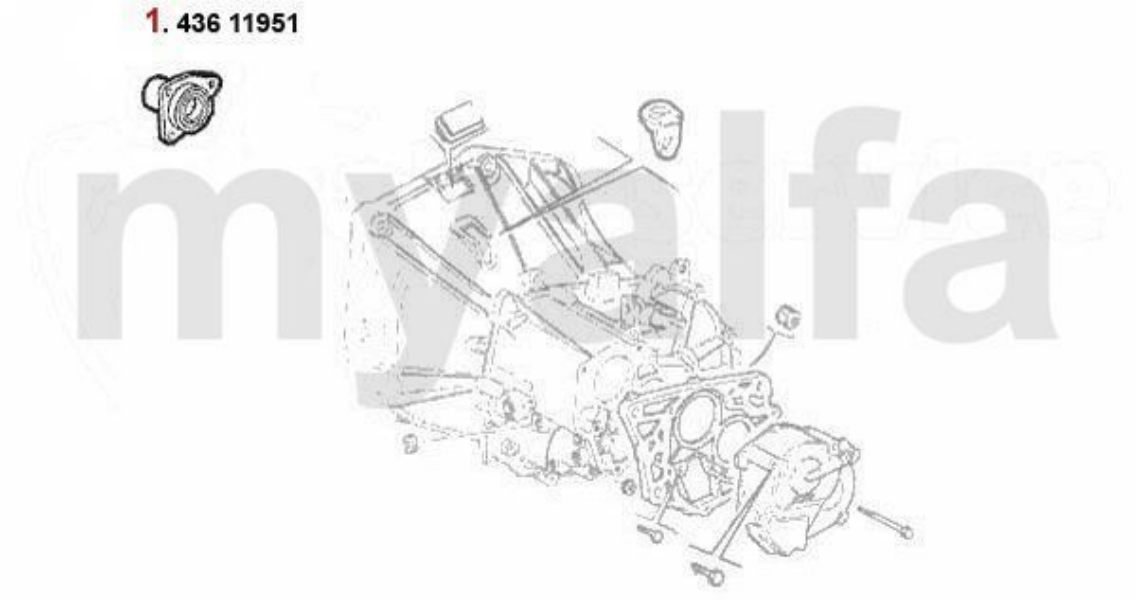

1	***43611951***	***OE.46411951 GUIDE SLEEVE RELEASE BEARING***	***€125.21***

Kupplungs-Kit/Clutch Set gtv/spider (916) 3.0 V6 12V

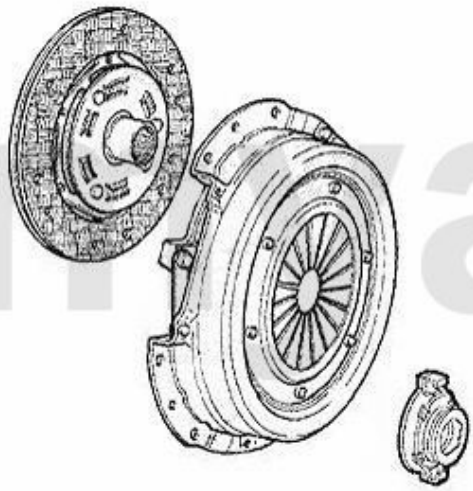

1. 431 790001
Ø 230 mm
>1998

2. 431 727001
Ø 235 mm
1998>

1	*43190001*	*CLUTCH KIT SPIDER (916) 3.0 V6 FROM 06.1995-12.1998, GTV (916) 2.0 V6 TURBO FROM >98 ON*	*€256.30*
2	*43172701*	*OE. 71734944 CLUTCH KIT*	*€326.89*

Kupplungs-Kit/Clutch Set gtv/spider (916) 3.0 V6 24V

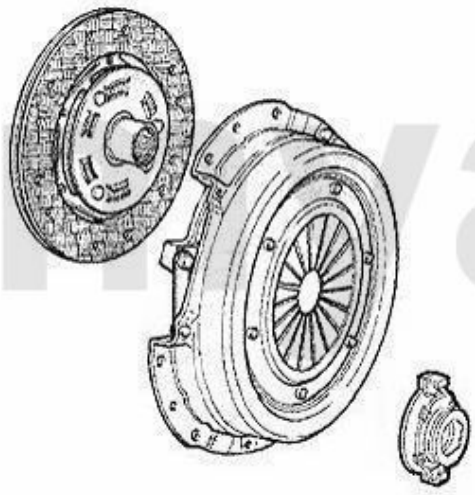

1. 431 727001
Ø 235 mm
gtv >1998

2. 431 735943
Ø 235 mm
gtv/spider 1998>

1	*43172701*	*OE. 71734944 CLUTCH KIT*	*€326.89*
2	*43135943*	*OE. 71735943 CLUTCH KIT 166, gtv/spider (916) 3.0 V6 24V =*	*€310.08*

Ausrücker/Sleeve Bearing gtv/spider (916) 3.0 V6 12V

1. 436 11951

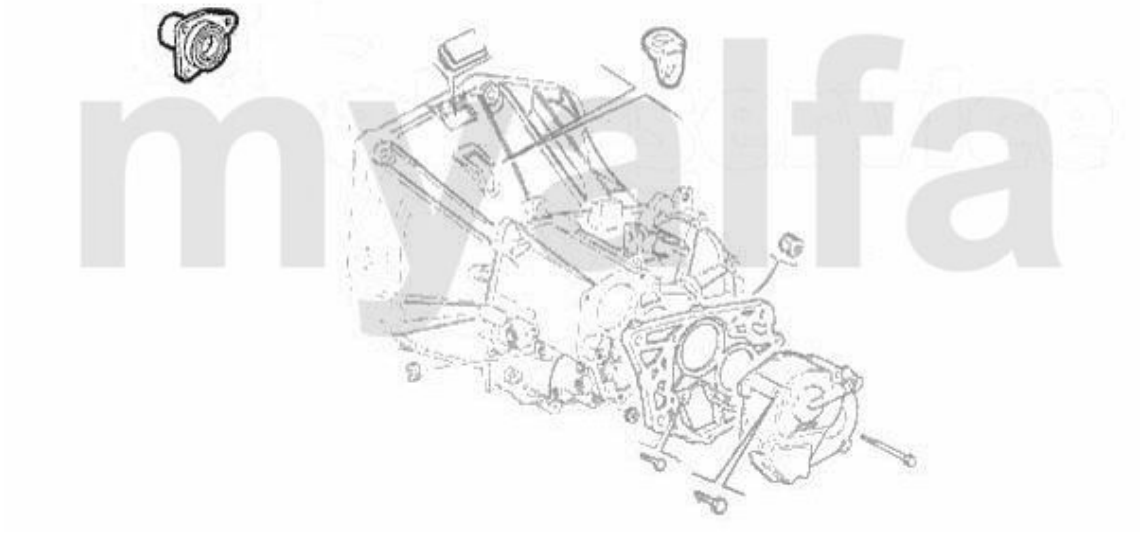

1 43611951 OE.46411951 GUIDE SLEEVE RELEASE BEARING €125.21

Ausrücker/Sleeve Bearing gtv/spider (916) 3.0 V6 24V

1. 436 11951

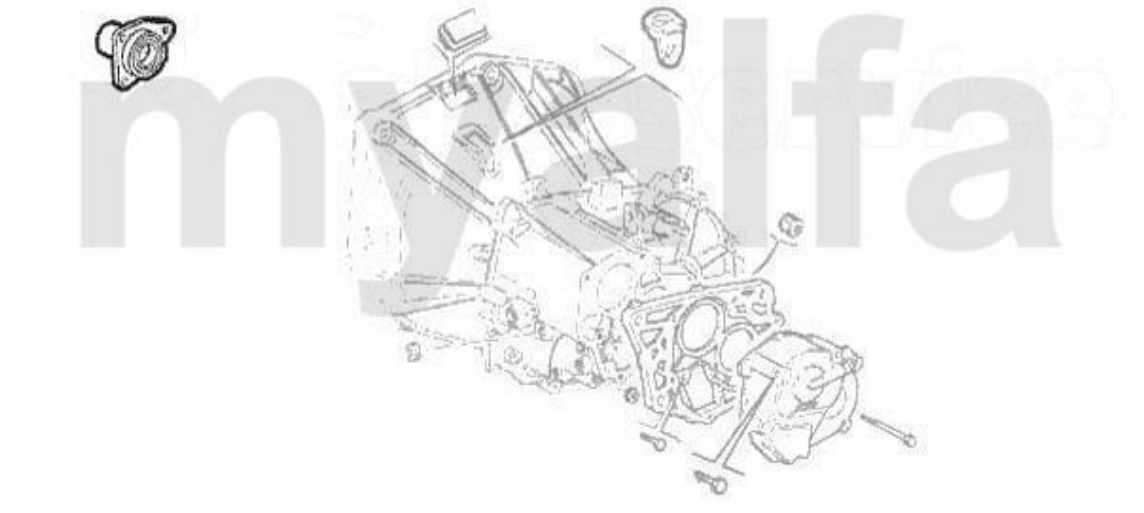

1	*43611951*	*OE.46411951 GUIDE SLEEVE RELEASE BEARING*	*€125.21*

Ausrücker/Sleeve Bearing gtv/spider (916) 3.0 V6 24V

1. 436 11951

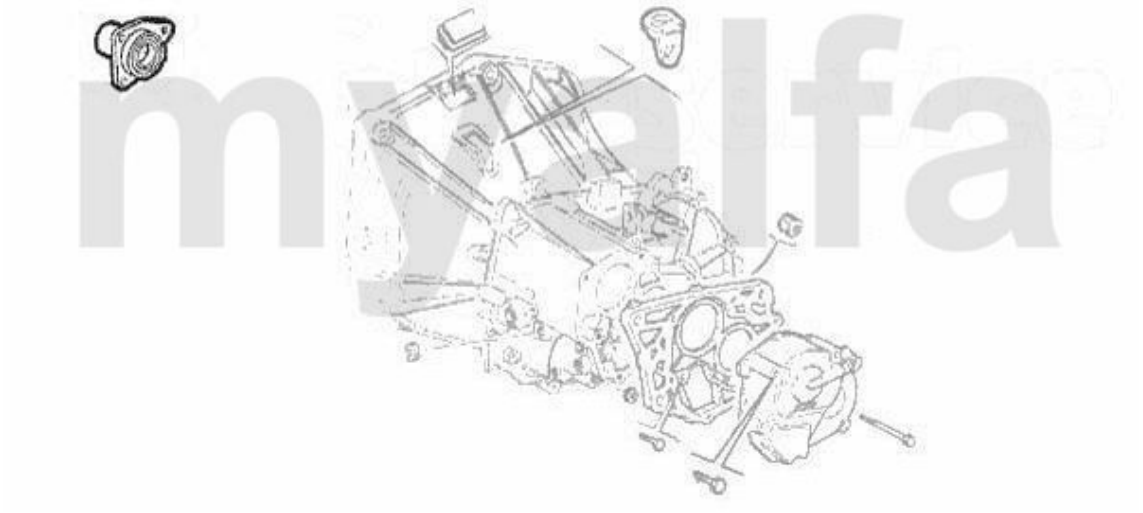

1	*43611951*	*OE.46411951 GUIDE SLEEVE RELEASE BEARING*	*€125.21*

Kupplungs-Kit/Clutch Set gtv/spider (916) 3.2 V6 24V



1	*43139521*	*OE. 71739521/71728897 CLUTCH KIT 147,156,916 GTA 147, 156,*	*€399.16*

Ausrücker/Sleeve Bearing gtv/spider (916) 3.2 V6 24V

1. 436 11951

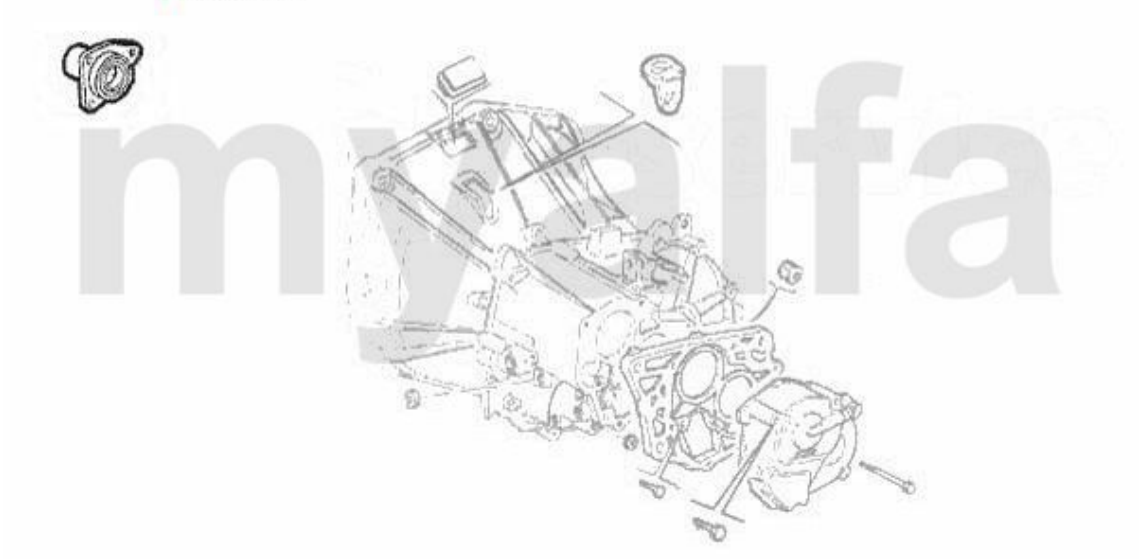

1	*43611951*	*OE.46411951 GUIDE SLEEVE RELEASE BEARING*	*€125.21*

Ausrücker/Sleeve Bearing gtv/spider (916) 3.0 V6 24V

1. 436 11951

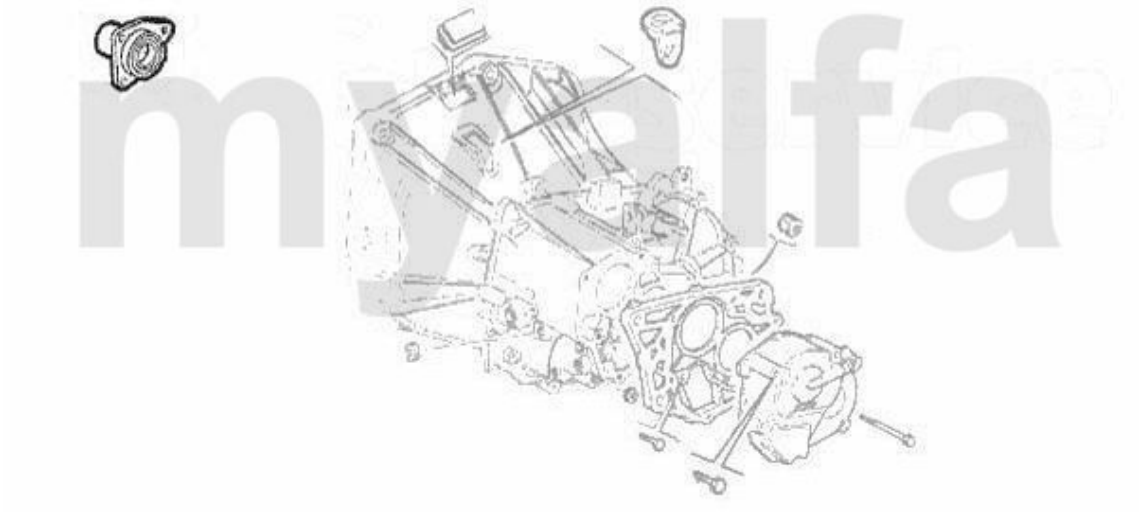

1	*43611951*	*OE.46411951 GUIDE SLEEVE RELEASE BEARING*	*€125.21*

Kupplungsbetätigung/Clutch Actuation gtv/spider (916) 1.8/2.0 TS



1	43827	O.E. 60586737/60809897 CLUTCH CYLINDER 145/6 155 GTV/SPIDER (916)	€75.55
1	4130390	4130390 GEAR SHIFT LEVER REPAIR KIT 916 SPIDER / GTV	€10.84
2	43824	OE. 71739541 CLUTCH SLAVE CYLINDER	€50.00
3	43857674	OE. 60657674 CLUTCH HOSE	On request

Kupplungsbetätigung/Clutch Actuation gtv/spider (916) 2.0 JTS



1	43827	O.E. 60586737/60809897 CLUTCH CYLINDER 145/6 155 GTV/SPIDER (916)	€75.55
1	4130390	4130390 GEAR SHIFT LEVER REPAIR KIT 916 SPIDER / GTV	€10.84
2	43824	OE. 71739541 CLUTCH SLAVE CYLINDER	€50.00

Kupplungsbetätigung/Clutch Actuation gtv/spider (916) 2.0 V6 Turbo



1	43827	O.E. 60586737/60809897 CLUTCH CYLINDER 145/6 155 GTV/SPIDER (916)	€75.55
1	4130390	4130390 GEAR SHIFT LEVER REPAIR KIT 916 SPIDER / GTV	€10.84
2	4388	CLUTCH SLAVE CLYINDER SUD/SPRINT, 33 (905/7), 145, 156, 156	€52.52

Kupplungsbetätigung/Clutch Actuation gtv/spider (916) 3.0 V6 12V



1	43827	O.E. 60586737/60809897 CLUTCH CYLINDER 145/6 155 GTV/SPIDER (916)	€75.55
1	4130390	4130390 GEAR SHIFT LEVER REPAIR KIT 916 SPIDER / GTV	€10.84
2	4388	CLUTCH SLAVE CLYINDER SUD/SPRINT, 33 (905/7), 145, 156, 156	€52.52

Kupplungsbetätigung/Clutch Actuation gtv/spider (916) 3.0 V6 24V



1	43827	O.E. 60586737/60809897 CLUTCH CYLINDER 145/6 155 GTV/SPIDER (916)	€75.55
1	4130390	4130390 GEAR SHIFT LEVER REPAIR KIT 916 SPIDER / GTV	€10.84
2	4388	CLUTCH SLAVE CLYINDER SUD/SPRINT, 33 (905/7), 145, 156, 156	€52.52

Kupplungsbetätigung/Clutch Actuation gtv/spider (916) 3.2 V6 24V



1	43827	O.E. 60586737/60809897 CLUTCH CYLINDER 145/6 155 GTV/SPIDER (916)	€75.55
1	4130390	4130390 GEAR SHIFT LEVER REPAIR KIT 916 SPIDER / GTV	€10.84
2	4388	CLUTCH SLAVE CLYINDER SUD/SPRINT, 33 (905/7), 145, 156, 156	€52.52

Federbeine/Struts gtv/spider (916) vorne/front



1	51170765	FRONT STRUT SPIDER/GTV (916) 4- CYLINDER FROM 1998 > #6037255,2-TUBE GAS DAMPER	On request
2	5114919	OE. 60653939 FRONT STRUT	On request
3	51186813	OE. 60686813 SHOCK ABSORBER FA 916 4-Cyl # 07011934>	On request
4	51170766	FRONT STRUT SPIDER/GTV (916) 6-CYLINDER FROM 1998 > #6037255,2-PIPE GAS DAMPER	€133.61
5	5114905	OE. 60519643 FRONT STRUT 916	On request
6	51126914	OE. 60626914 SHOCK ABSORBER FA 916 3.0/ 3.2 V6 24V	€164.62
7	51976615	OE. 60806382 HEX NUT	€9.66
8	51976614	OE. 46546940 NUT	€16.72
9	51785428	OE. 60651125 STRUT BEARING RIGHT	€262.94
10	51785427	OE. 60629998 STRUT BEARING LEFT	€262.94
11	51998909	OE. 60598909 ELASTIC PAD f. FRONT STRUT 916	€18.91
12	51985498	OE. 60585498 BOOT f. FRONT STRUT 916	€22.10
13	51968700	OE. 60568700 INSULATING RING f. FRONT STRUT 916	On request
14	51449537	OE. 60619407 SPRING 916 FRONT	On request
15	51453942	OE. 60653942 FRONT SPRING gtv/spider (916) 2.0 JTS	€68.15
16	51419406	OE.60615178 FRONT SPRING	€100.76
17	51452249	OE. 60652249 FRONT SPRING gtv/spider (916) 3.0/3.2 V6	€100.76

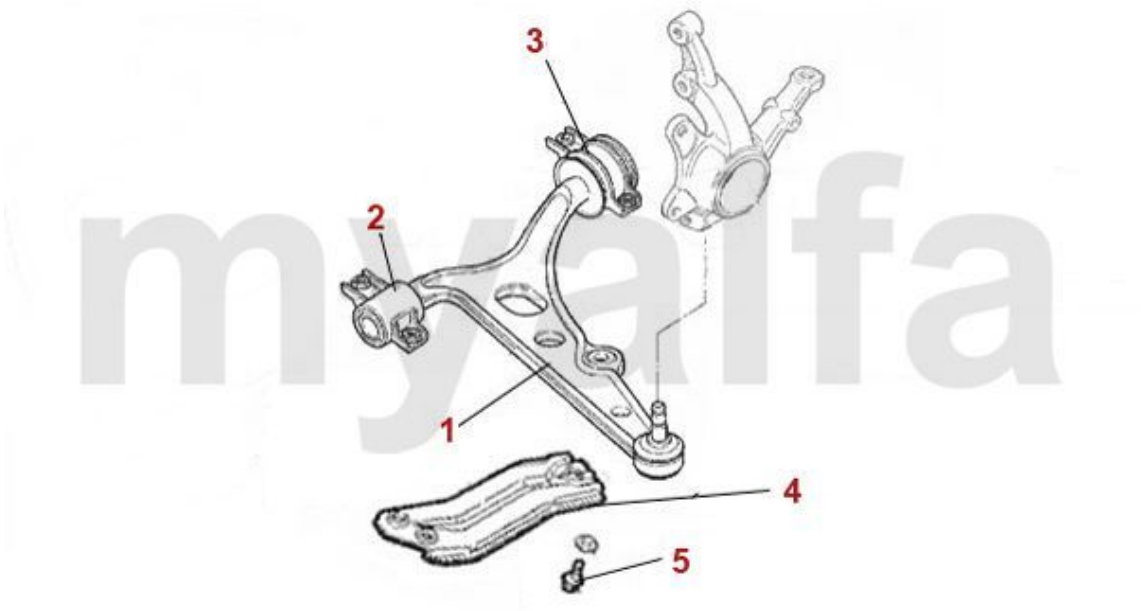

1	533170	OE. 60813014 SUSPENSION ARM	€62.94
1	533171	OE. 60813013 SUSPENSION ARM	€62.94
2	53511	INNER RIGHT WISHBONE STOCK 145/6, 155, GTV&SPIDER (916) MATCHING PART FOR ql170/2	€14.96
2	53513	INNER LEFT WISHBONE STOCK 145/6, 155, GTV&SPIDER (916) MATCHING PART FOR ql171/3	€14.96
2	535802	POWERFLEX BUSH FOR FRONT LOWER WHISHBONE REAR, SPIDER/GTV (916) FULL SET	€58.74
3	53512	OUTER RIGHT WISHBONE STOCK 145/6, 155, GTV&SPIDER (916) MATCHING PART FOR ql170/2	€18.91
3	53514	OUTER LEFT WISHBONE STOCK 145/6, 155, GTV&SPIDER (916) MATCHING PART FOR ql171/3	On request
3	535801	POWERFLEX BUSH FOR FRONT LOWER WHISHBONE FRONT, SPIDER/GTV (916), FULL SET	€58.74
4	52354608	OE. 60626295 STRUT	On request
4	52354607	OE. 60626296 STRUT	On request
5	52386024	OE. 11586024 SCREW	€5.80

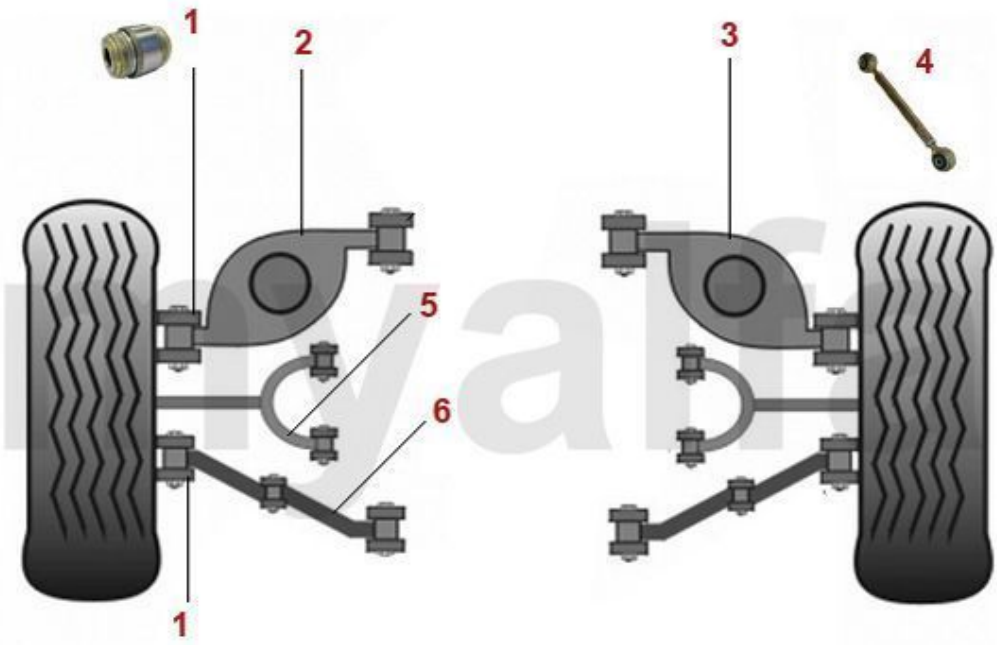

Quelle Original Bild : Powerflex UK

1	5319160	BUSH FOR REAR SWINGING ARM gtv/spider (916)/166 WHEELSIDE	€20.08
2	53127600	OE. 60627600/60612319 REAR SPRING PAN TRAILING ARM GTV/SPIDER 916, LEFT	€226.81
3	53127601	OE. 60627601/60612320 REAR SPRING PAN TRAILING ARM GTV/SPIDER (916), RIGHT	€226.81
4	55427480	OE. 60627480 ROD	€116.81
5	53138910	OE. 60612317/8/60627604/5 REAR TRANSVERSE LINK	€159.58
6	5353029	OE. 60612321/60627482 REAR SUSPENSION ARM (916)	€134.37

Stabilisator vorne/Stabilizer front spider/gtv (916)

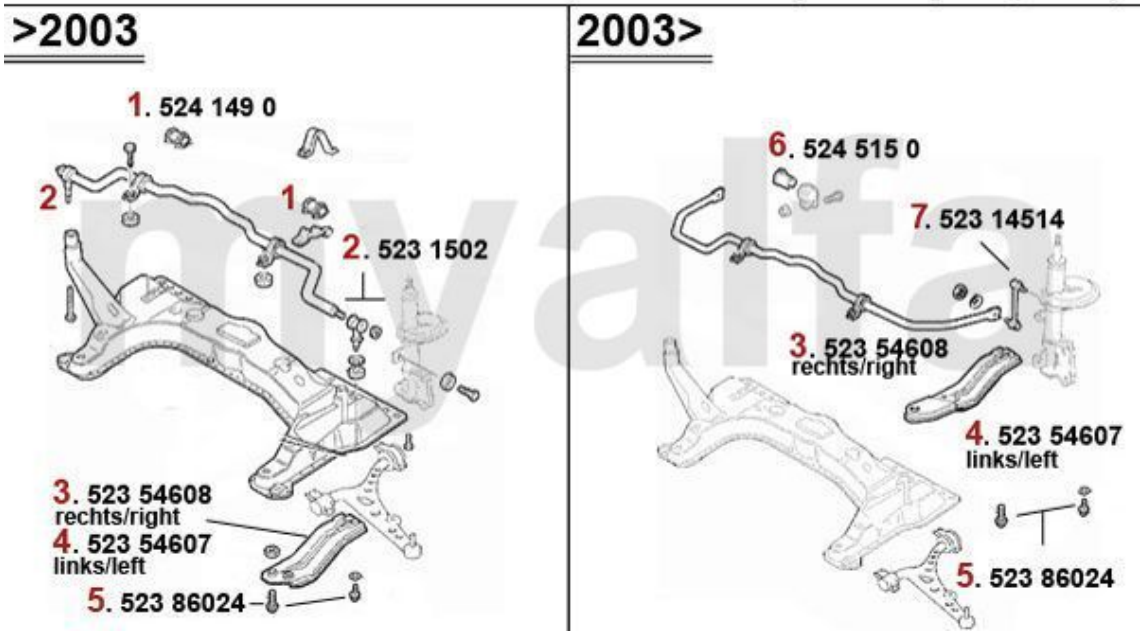

1	5241490	ANTI-ROLL BAR RUBBER FRONT 916 >2003	€16.64
2	5231502	OE. 60570627 OUTER STABILIZER MOUNT COMPL., INCL. RUBBERS	€20.08
3	52354608	OE. 60626295 STRUT	On request
4	52354607	OE. 60626296 STRUT	On request
5	52386024	OE. 11586024 SCREW	€5.80
6	5245150	ANTI-ROLL BAR RUBBER FRONT 916 1998>	On request
7	52314514	OE. 60614514 STRUT	€27.31

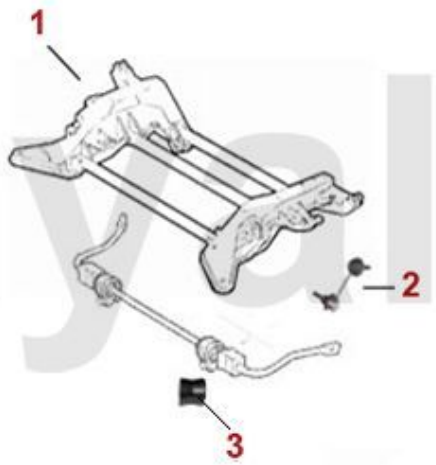

1	54124847	OE. 60622433 SUBFRAME	On request
2	52312435	OE.60612435 REAR RIGHT STABILIZER MOUNT GTV/SPIDER (916)	€41.93
2	52312436	OE.60612436 REAR LEFT STABILIZER MOUNT GTV/SPIDER (916)	€41.93
3	5342746	OE. 82412746 SWAY ARM BUSH	€12.44

Radlager/Wheel Bearing gtv/spider (916) - 4 Cyl.



1	5449051	OE. 71714460 WHEEL BEARING SET	€49.58
2	54415843	Radlager VA 145/6 Bj. 99> mit ABS, gtv/spider (916) # 6063042>	€72.69
3	54366910	OE. 82466910 WHEEL HUB FA 916,147	€46.22
4	54316023	OE. 60613615 REAR HUB	€130.25
5	5436090	OE. 60656090 REAR WHEEL HUB (916)	€94.54

Radlager/Wheel Bearing gtv/spider (916) - 6 Cyl.



1	5449054	OE. 71714472 WHEEL BEARING SET	€74.79
2	54415843	Radlager VA 145/6 Bj. 99> mit ABS, gtv/spider (916) # 6063042>	€72.69
3	5433000	FRONT WHEEL HUB 156,GTV/SPIDER(916)	€64.71
4	54310369	OE. 60510369 HUB 147,156, gtv/spider (916),Nuovo GT V6	€105.88
5	54316023	OE. 60613615 REAR HUB	€130.25
6	5436090	OE. 60656090 REAR WHEEL HUB (916)	€94.54

Dämpfung/Suspension gtv/spider (916) hinten/rear



1	51170767	OE. 60619645 REAR STRUT	€108.40
2	5115075	OE. 60654082 REAR SHOCK 916	€109.16
3	51929544	OE. 60629544 THRUST RING 916 REAR	On request
4	51915402	SUPPORT FOR STOP RUBBER REAR AXLE GTV/SPIDER (916)	€52.02
5	51988459	REAR BUMP STOP 145/6, 155, SPIDER/GTV (916)	€27.31
6	51449536	OE. 60617395 REAR SPRING UP TO > #07011934	€67.23
7	51486814	OE. 60686814 REAR SPRING 916 #07011935>	On request
8	51430301	OE. 60630301 REAR SPRING 916 3.0/3.2 V6 24V	€67.98
9	51935857	OE. 82435857 THRUST RING REAR 916	€20.59
10	53127600	OE. 60627600/60612319 REAR SPRING PAN TRAILING ARM GTV/SPIDER 916, LEFT	€226.81
11	53127601	OE. 60627601/60612320 REAR SPRING PAN TRAILING ARM GTV/SPIDER (916), RIGHT	€226.81

Lenkung/Steering gtv/spider (916)



1	554189	OUTER LEFT TRACK ROD END 13mm 145/6, 155, SPIDER/GTV 916 ATTENTION: PLEASE VERIFY IF 13	€51.26
2	554188	OUTER RIGHT TRACK ROD END 13mm 145/6, 155, SPIDER/GTV 916 ATTENTION: PLEASE VERIFY I	€51.26
3	55464	OUTER LEFT TRACK ROD END 14mm, 155, SPIDER/GTV 916 ATTENTION: PLEASE VERIFY IF 14	€51.26
4	55465	OUTER RIGHT TRACK ROD END 14mm 155, SPIDER/GTV 916	€51.26
5	554115	TIE ROD END 145/6,155 TD/J TD spider/gtv (916) 6-CYLINDER	€41.18
6	5541100	OE. 9947719 TIE ROD END	€38.82
7	55583588	OE. 9950650 BOOT SET	€20.92
8	55583871	OE. 9947721 STEERING BOOT SET	€24.29

Bremsscheiben/Brakedisks gtv/spider (916)

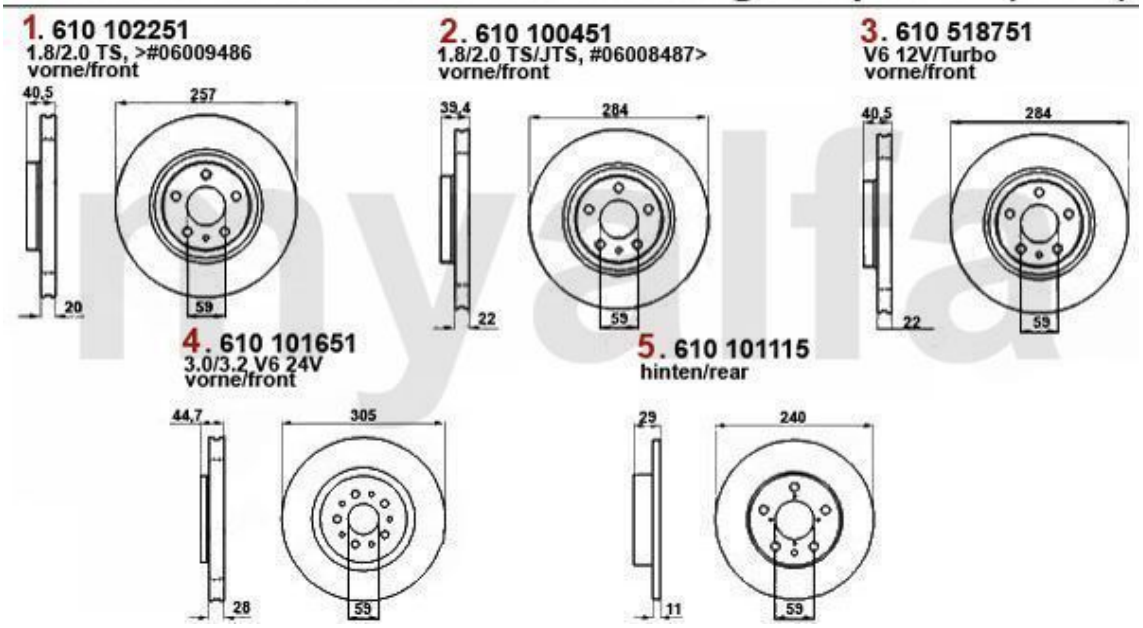

1	61001251	FRONT BRAKE DISC (916) 2.0 TS UNTIL #6009486 >07.1995 ONLY BENDIX BRAKE SYSTEM	€59.66
2	61000451	OE. 71738907 BRAKE DISC	€69.83
3	61018751	OE. 71739568 FRONT BRAKE DISK 147, 156, 164, gtv/spider (916)	€63.02
4	61001651	OE. 60652186 / 60670801 FRONT BRAKE DISC 147/156 GTA, gtv/spider 3.0/3.2 V6 24V	€73.36
5	61001115	OE. 71739571 REAR BRAKE DISC	€41.60

Brembeläge/Brakepads gtv/spider (916)

1. 23168 193 25
TS/V6/Turbo, >#06009486
vorne/front
System: Lucas-Girling

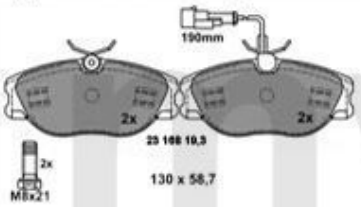

2. 20833 171 25
TS, #06009487>
vorne/front
System: Bendix/Benditalia

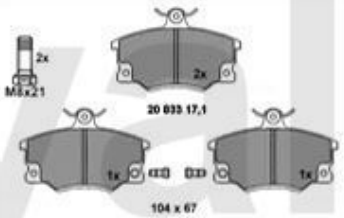

3. 21 636 193 05
TS,V6/Turbo #06009487>
vorne/front
System: Ate

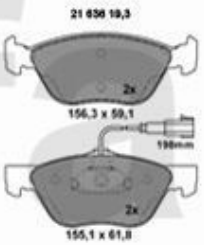

4. 21381 180 05
3.0/3.2 V6 24V
vorne/front
System: Brembo

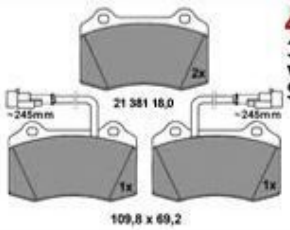

5. 21103 144 04
hinten/rear
System: Brembo

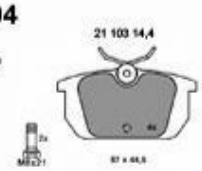

1	23119325	SBB VA mit WE spider/gtv (916) 2.0/ TS/V6 turbo/3.0 V6/24V Bj. >05.98 Bremssystem: Lucas	€82.27
2	20817125	SBB VA mit WE 145/6 1.4/1.6/1.7/1.8 16V/TS bj. 94-96,155 1.7/1.8/2.0/TS 1.9TD,spider (916)	€41.60
3	21619305	OE. 9950637 BRAKE PAD SET	€56.72
4	21318015	OE. 9950812 BRAKE PAD SET	€93.11
5	21114404	OE. 77362242 REAR BRAKE PAD SET	€46.13

Bremszangen/Calipers gtv/spider (916) vorne/front >1998



1	66150554	OE. 9950554 BRAKE CALIPER FL	€228.49
2	66150559	OE. 9950559 BRAKE CALIPER FR 155 2.0 TS 16V	€228.49
3	66112345	FRONT LEFT BRAKE CALIPER 145/6 1.7 ie 16V, 155, GTV/SPIDER (916) 2.0TS >1996, BRAKE SYSTEM BENDIX	€133.61
4	66112346	FRONT RIGHT BRAKE CALIPER 145/6 1.7 ie 16V, 155, GTV/SPIDER (916) 2.0TS >1996, BRAKE SYSTEM BENDIX	On request
5	66123127	OE. 9947391 FRONT LEFT BRAKE CALIPER gtv/spider (916), 145/6 1.8/2.0 TS	€133.61
6	66123128	OE. 9947392 FRONT RIGHT BRAKE CALIPER gtv/spider (916), 145/6 1.8/2.0 TS	€133.61
7	66147849	Frontbrake Callipper 147,156, 916 3.2 V6	On request
8	66147850	Frontbrake Callipper 147,156, 916 3.2 V6	On request

Bremszangen/Calipers gtv/spider (916) vorne/front 1998>



1	*66123127*	*OE. 9947391 FRONT LEFT BRAKE CALIPER gtv/spider (916), 145/6 1.8/2.0 TS*	*€133.61*
2	*66123128*	*OE. 9947392 FRONT RIGHT BRAKE CALIPER gtv/spider (916), 145/6 1.8/2.0 TS*	*€133.61*
3	*66147849*	*Frontbrake Callipper 147,156, 916 3.2 V6*	*On request*
4	*66147850*	*Frontbrake Callipper 147,156, 916 3.2 V6*	*On request*

Bremszangen/Calipers gtv/spider (916) hinten/rear



1	66112375	OE. 9950477 FRONT CALIPER	On request
2	66112376	OE. 9950478 FRONT CALIPER	On request
3	66143038	OE. 9950866 REAR LEFT CALIPER	€159.66
4	66143039	OE. 60814347 REAR RIGHT BRAKE CALIPER, SYSTEM: LUCAS, 1-PISTON ALUMINIUM	€159.66
5	66148040	OE. 9948040 BRAKE CALIPER RL 916 V6 24V	On request
6	66148043	OE. 9948043 BRAKE CALIPER RR 916 V6 24V	On request

BKV/Hauptzylinder/Brakeservo/Master cyl. gtv/spider (916)

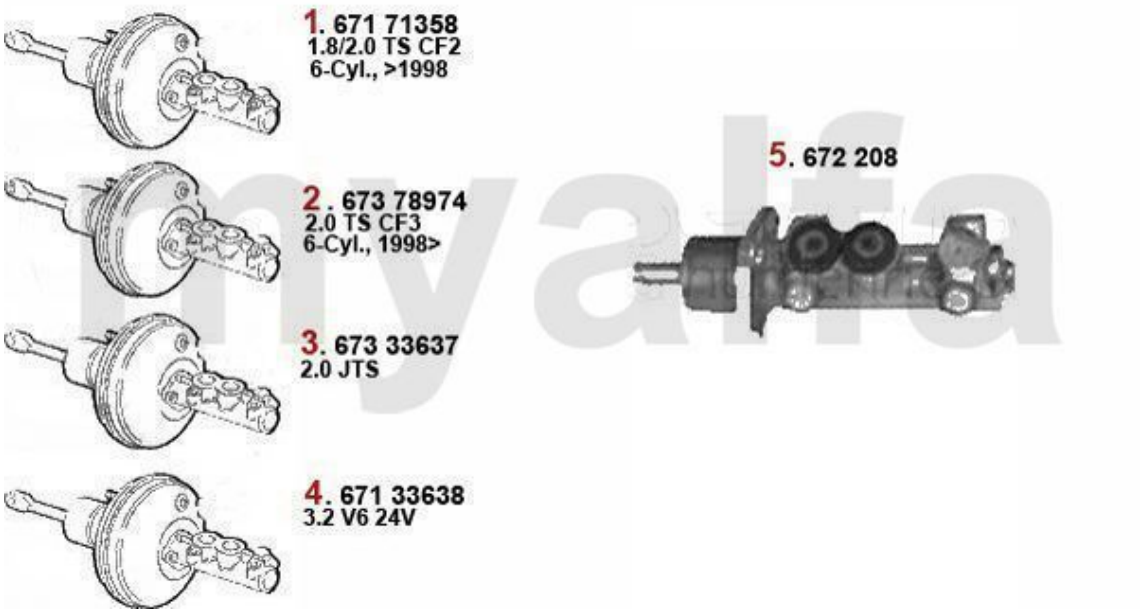

2	67178974	Bremskraftverstärker gtv/spider (91 6) Bj. 98> 2.0 TS CF3/3.0 V6/24V	On request
3	67133637	OE. 51733637 BRAKE-SERVO 916 2.0 JTS	On request
4	67133638	OE. 51733638 BRAKE-SERVO 916 3.2 V6 24V	€663.87
5	672208	Brake Master Cylindre 145/6, 155,916	€100.76

Bremskraftregler/Brake Valve gtv/spider (916)



1	*674052*	*BRAKE POWER REGULATOR 145/6, 155 GTV/SPIDER (916) >6026240*	*€209.24*
2	*674786*	*Bremskraftregler gtv/spider (916) # 6024240>*	*On request*

Bremsschlauch/Brake Hose gtv/spider (916)

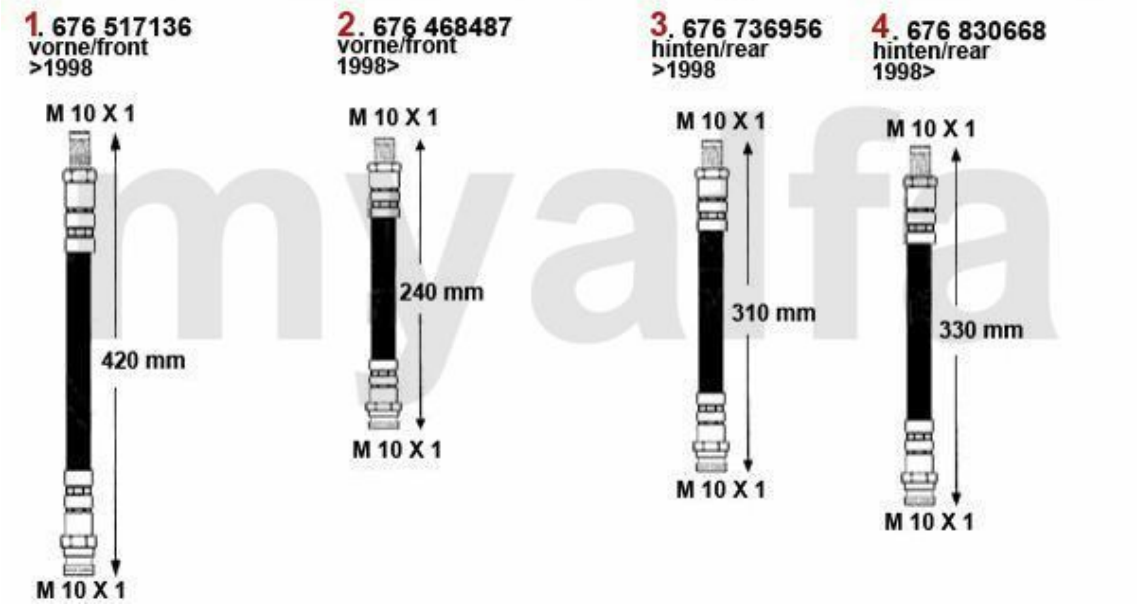

1	67617136	OE. 7728274 BRAKE HOSE	€15.04
2	67668487	OE. 46468487 BRAKE FLEX. HOSE FRONT gtv/spider (916) V6 24V	€23.11
3	67636956	OE. 71736956 REAR BRAKE HOSE (916) FROM 1998 ON	€17.65
4	67630668	OE. 46830668 REAR BRAKE HOSE gtv/spider (916) 1998>	€23.11

Handbremsseil/Brake Cable gtv/spider(916)

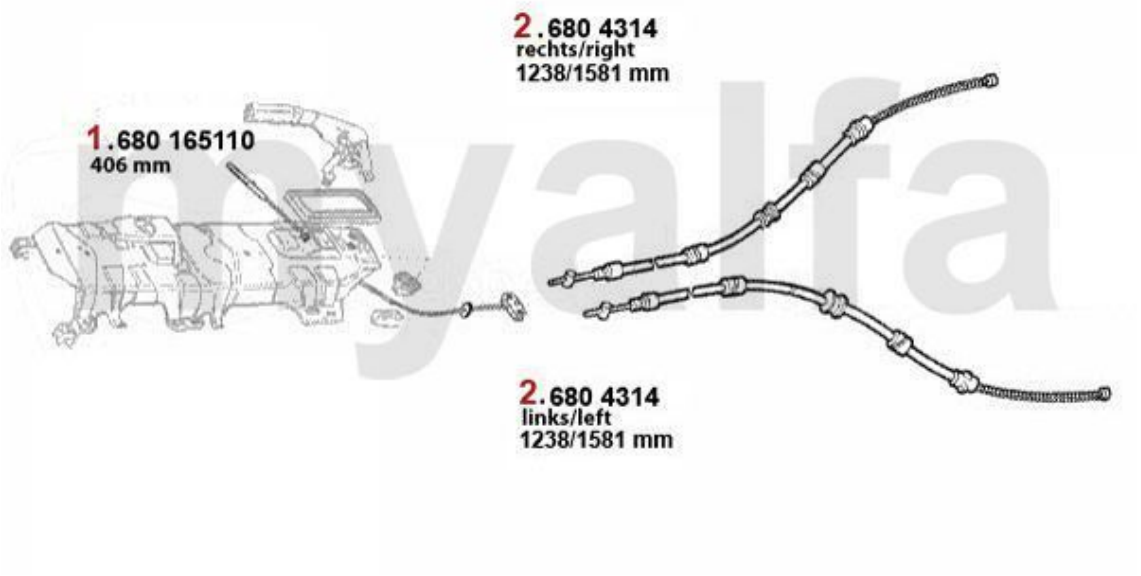

1	*68065110*	*FRONT HAND BRAKE CABLE 145/6,147, 155, spider/gtv (916) Nuovo GT*	*€18.07*
2	*6804314*	*OE. 60616741 BRAKE CABLE*	*€24.37*

Zündanlage/Ignitionsystem (916) 1.8/2.0 TS



1	812286	IGNITION COIL 145/6,155,156, spider/gtv (916) 1.6-2.0 TS, FROM 1995 ON	€76.72
2	812287	IGNITION COIL 145/6,155,156, 166,GTV/Spider (916) 1.4-2.0 TS FROM 09.1997 ON	€74.79
3	812297	OE. 46755605 COIL	€79.75
4	8181538	IGNITION WIRE SET 145/6 1.4/1.6/1.8/2.0/ ie 16V TS Bj.1997>, 155 1.6/1.8/2.0 ie 16V TS, gtv/spider (916) 1.8	€178.91
5	81866953	IGINITION CABLE SET 147, 156, 166, gtv/ spider (916), Nuovo GT - TS 16V CF3	€133.61
6	BKR6EKPA	OE. 46521529 SPARK PLUG	€27.65
7	PMR7A	OE. 46521530 SPARK PLUG	€23.53
8	81266953	SET IGNITION COILS AND CABLES OE 60666953	On request

Zündanlage/Ignitionsystem (916) 2.0 JTS



1	812782	OE. 46794782 COIL 2.0 JTS	€74.79
2	81892126	OE. 55192126 CABLE HARNESS 2.0 JTS	€671.43
3	BKR6EKPA	OE. 46521529 SPARK PLUG	€27.65

Zündanlage/Ignitionsystem (916) 2.0 V6 Turbo



1	812365	OE. 60623365 COIL 2.0 V6 Turbo 164/Super gtv/spider	On request
2	817516	OE. 60513050 Cap	€217.65
3	81640	OE. 60513052 Rotor	€50.34
4	8181540	OE. 60567866 IGNITION CABLE SET	€175.63
5	BPR6ES	SPARK PLUG NGK GTV/SPIDER (916) 3.0 V6,2.0 V6 TURBO FROM 1998> ON	€4.87

Zündanlage/Ignitionsystem (916) 3.0 V6 12V

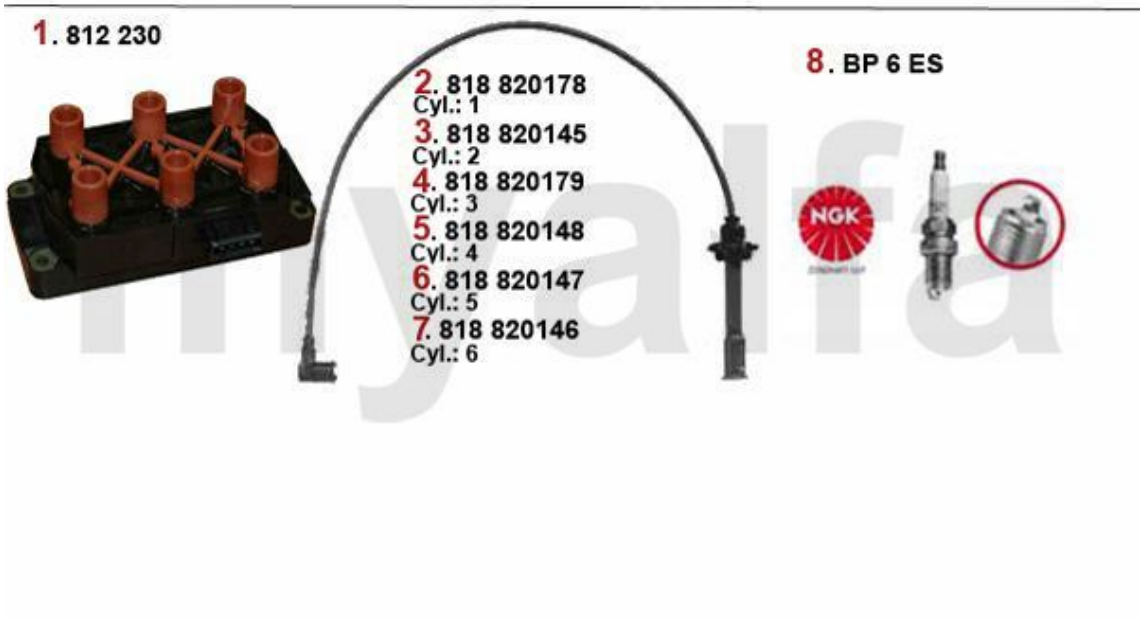

1	812230	OE. 60564142 COIL V6	On request
2	81820178	Zündleitung spider (916) 3.0 V6 Zylinder 1	On request
3	81820145	Zündleitung spider (916) 3.0 V6 Zylinder 2, 164 V6 Bj. 92> Zyl.1+2	On request
4	81820179	Zündleitung spider (916) 3.0 V6 Zylinder 3	On request
5	81820148	Zündleitung spider (916) 3.0 V6 Zylinder 4	On request
6	81820147	Zündleitung spider (916) 3.0 V6 Zylinder 5	On request
7	81820146	Zündleitung spider (916) 3.0 V6 Zylinder 6	On request
8	BP6ES	OE. 71736278 SPARK PLUG NGK	€4.12

Zündanlage/Ignitionsystem (916) V6 24V



1	812213	OE. 60562701 Coil	€88.15
2	81891046	IGNITION CABLE SET V6 24V CF3	On request
3	PFR6B	OE. 60579903 SPARK PLUG NGK	€15.55

Aggregate/Aggregats gtv/spider (916) TS



1	82217775	OE.60620761 STARTER 145/6 1.4 ie,2.0ie 16V TS, 166 2.0TS,gtvSpider(916) 2.0 16V TS	€200.84
2	82217770	STARTER 145 1.7ie 16V/2.0 16V QV FROM 03.98>, 147 1.6/2.0 16V TS 156,GTV/SPIDER (916) 2.0	€167.23
3	82162660	Lichtmaschine 145/6,155,156 gtv/spi der (916) 2.0 TS	€232.77
4	82142780	OE. 46769369 GENERATOR 105 A	€267.31

Aggregate/Aggregats gtv/spider (916) JTS



1	*82219930*	*OE. 55193406 STARTER MOTOR TS 16V/JTS 156 # 1287014>*	*€197.48*
2	*82182219*	*OE. 46782219 ALTERNATOR 2.0 TS 16V/JTS 2002>*	*€268.07*

Aggregate/Aggregats gtv/spider (916) V6 Turbo



1	*82215600*	*OE. 77274850 STARTER*	*€167.23*
2	*82140920*	*OE. 60613075 GENERATOR*	*€293.78*

Aggregate/Aggregats gtv/spider (916) V6 12V



1	*82215600*	*OE. 77274850 STARTER*	*€167.23*
2	*82140920*	*OE. 60613075 GENERATOR*	*€293.78*
3	*82141280*	*ALTERNATOR, 156,166 GTV/SPIDER(916) 6*	*€360.50*

Aggregate/Aggregats gtv/spider (916) V6 24V



1	82215600	OE. 77274850 STARTER	€167.23
2	82141280	ALTERNATOR, 156,166 GTV/SPIDER(916) 6	€360.50
3	82173305	OE. 60673305 ALTERNATOR 3.2 V6 24V - GTA	€217.65

Fensterheber/Windowlifter (916)

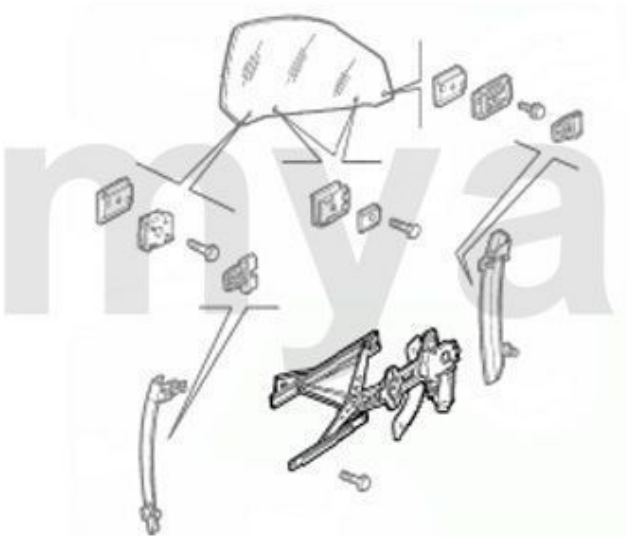

1. 119 30233
Links/left
1995-1998

2. 119 30232
Rechts/right
1995-1998

3. 119 67937
Links/left
1998-2006

4. 119 67936
Rechts/right
1998-2006

1	11930233	WINDOW REGULATOR GTV/SPIDER (916) 1995-98 LEFT OE. 71730233	€200.84
2	11930232	WINDOW REGULATOR GTV/SPIDER (916) 1995-98 RIGHT OE. 71730232	€200.84
3	11967937	WINDOW REGULATOR GTV/SPIDER (916) 1998-2006 LEFT OE. 60667937	€234.45
4	11967936	WINDOW REGULATOR GTV/SPIDER (916) 1998-2006 RIGHT OE. 60667936	€234.45



1	8701310	ELECTRIC ANTENNA	€79.83
1	8704650	ANTENNA GTV/SPIDER 916, MANUAL OPERATION	€54.54

0	172917	FLOOR MATS SET GTV (916) (4PC.) BLACK, EMBROIDERED EMBLEM, REAR SIDE: LATEX SURFACE	€71.43
1	1729161	FLOOR MATS SET GTV (916) (4 PC.) BLACK, RED VELOURS EMBLEM, REAR SIDE: LATEX SURFACE	€74.79
1	172916	FLOOR MATS SET SPIDER (916) (2PC.) BLACK, RED VELOURS EMBLEM, REAR SIDE: LATEX SURFACE	€57.98
1	1729170	FLOOR MATS SET GTV (916) (4PC.) BLACK, EMBROIDERED EMBLEM, REAR SIDE: LATEX SURFACE	€74.79

1	*9822260*	*BATTERY CHARGER AB-4 ABSAAR*	*€33.53*
2	*9822250*	*BATTERY LIFE SAFER*	*€32.35*
3	*8701130*	*BATTERY SWITCH / MASS POLE CLAMP*	*€8.32*

1	*1729161*	*FLOOR MATS SET GTV (916) (4 PC.) BLACK, RED VELOURS EMBLEM, REAR SIDE: LATEX SURFACE*	*€74.79*
1	*172916*	*FLOOR MATS SET SPIDER (916) (2PC.) BLACK, RED VELOURS EMBLEM, REAR SIDE: LATEX SURFACE*	*€57.98*

0	*9850040*	*FENDER PROTECTOR MYALFAGROUP*	*€33.53*