ALFA 75

All prices including tax, delivery costs are extra

Table Of Content

BODY 7
MIRROR 7
LIGHTING 8
REPAIR PANELS 9
BODYPARTS 10
BUMPER/GRILLE/PANEL 11
RUBBER GASKET 12
WIND DEFLECTOR 13
WIND DEFLECTOR 13
CAR COVER 13
GLASS PARTS 14
WINDSCREEN 14
ENGINE 15
V-BELTS 15
1.6/1.8/2.0 15
1.8 Turbo 16
2.0 TS 17
2.5 /3.0 V6 18
2.0/2.4 TD 19
FUEL SYSTEM 20
1.6/1.8/2.0 20
FUEL PUMP 20
1.8 Turbo 21
FUEL PUMP 21
2.0 TS 21
FUEL PUMP 21
2.5/3.0 V6 22
FUEL PUMP 22
FUEL MANAGEMENT 23
INTAKE MANIFOLD 75 1.6/1.8 CARB. 23
INJECTION SYSTEM 2.5/3.0 V6 24
ENGINE GASKETS 25
1.6/1.8/2.0 25
GASKETS ENGINE 25
HEAD SET 26
FULL SET 27
1.8 Turbo 28
GASKETS ENGINE 28
FULL SET 29
2.0 TS 30
GASKETS ENGINE 30
HEAD SET 31
FULL SET 32
2.5/3.0 V6 33
GASKETS ENGINE 33

HEAD SET 34
FULL SET 35
2.0/2.4 TD 36
GASKETS ENGINE 36
HEAD GASKET 37
HEAD SET 38
HEAD SCREW SET 39
REINZ UNIVERSAL 40
COOLING SYSTEM 41
1.6/1.8/2.0/IE 41
RADIATOR 41
THERMOSTAT 42
WATERPUMP 43
EXPANSION TANK 44
1.8 Turbo 45
RADIATOR 45
THERMOSTAT 46
WATERPUMP 47
EXPANSION TANK 48
2.0 TS 49
RADIATOR 49
THERMOSTAT 50
WATERPUMP 51
EXPANSION TANK 52
2.5/3.0 V6 53
THERMOSTAT 53
WATERPUMP 54
EXPANSION TANK 55
RADIATOR 56
2.0/2.4 TD 57
RADIATOR 57
THERMOSTAT 58
WATERPUMP 59
ENGINE MOUNT 60
1.6/1.8 /2.0 60
1.8 Turbo 61
2.0 T.S. 62
2.5/3.0 V6 63
2.0/2.4 TD 64
VALVE GEAR 65
1.6/1.8/2.0 65
CAMSHAFT 65
TIMING CHAIN 66
VALVE MECHANISM 67
1.8 Turbo 68
CAMSHAFT 68
TIMINGCHAIN 69

VALVE MECHANISM 70
2.0 TS 71
CAMSHAFT 71
TIMING CHAIN 72
VALVE MECHANISM 73
2.5/3.0 V6 74
CAMSHAFT 74
VALVE MECHANISM 75
TIMING BELT 76
2.0/2.4 TD 77
CAMSHAFT 77
VALVE MECHANISM 78
PISTONS/BEARINGS 79
PISTON/LINERS 4-Cyl. 79
BEARINGS 4-CYL. 80
PISTONS/BEARINGS 6-Cyl. 82
FILTER 83
1.6/1.8/2.0 83
1.8 Turbo 84
2.0 TS 85
2.5/3.0 V6 86
2.0/2.4 TD 87
EXHAUST SYSTEM 88
EXHAUST SYSTEM 88
1.6 IE wo. CAT. 88
1.6 IE CAT. 89
1.8 CARB. 90
1.8 IE wo. CAT. 91
1.8 IE CAT. 92
1.8 Turbo 93
2.0 TS wo. CAT. 94
2.0 TS CAT. 95
2.5/3.0 V6 wo. KAT. 96
2.5/3.0 V6 wo. KAT. 96
FAN TYPE EXHAUST PIPE 97
2.5/3.0 V6 KAT. 97
2.0/2.4 TD 98
OXYGEN SENSORS 99
1.6 IE 99
1.8 IE 100
2.0 TS 101
2.5/3.0 V6 102
DRIVE TRAIN 103
DRIVE SHAFT 103
1.6/1.8/2.0/IE/TS 103
1.8 Turbo 104
2.5/3.0 V6 105

2.0 TD 106
2.4 TD 107
SIDE SHAFT 1.6/1.8/2.0/IE/TS 108
SIDE SHAFT 1.8 Turbo 109
SIDE SHAFT 2.5/3.0 V6 110
SIDE SHAFT 2.0 TD 111
SIDE SHAFT 2.4 TD 112
GEARBOX 113
4-Cyl. 113
6-Cyl. 114
CLUTCH 115
1.6 115
1.8 116
1.8 Turbo 117
2.0 TS 118
2.5 V6 119
3.0 V6 120
2.0 TD 121
CLUTCH ACTUATION 122
1.6 122
1.8 123
1.8 Turbo 124
2.0 TS 125
2.5 V6 126
3.0 V6 127
2.0/2.4 TD 128
SUSPENSION 129
SPRINGS 129
SHOCK ABSORBER 4-Cyl. 130
SHOCK ABSORBER 6-Cyl. 131
ATTACHMENT FRONT 132
ATTACHMENT REAR 133
STABILIZER FRONT 134
STABILIZER REAR 135
WHEEL BEARING 136
STEERING 137
STEERING PARTS 137
STEERING RACK 138
BRAKE 139
BRAKE DISCS 139
BRAKE PADS 140
BRAKE PAD ATTACHMENT 141
CALIPER 142
BRAKE SERVO/BRAKE MASTER CYL. 143
BRAKE VALVE 144
BRAKE HOSES 145
BRAKE CABLE 146

ELECTRIC 147
ENGINE ELECTRIC 147
IGNITION SYSTEM CARBURATOR 147
IGNITION SYSTEM IE 148
IGNITION SYSTEM TURBO 149
IGNITION SYSTEM TS 150
IGNITION SYSTEM V6 151
STARTER/ALTERNATOR- 75 Carb. 152
STARTER/ALTERNATOR 75 IE 153
STARTER/ALTERNATOR- 75 Turbo 154
STARTER/ALTERNATOR- TS 155
STARTER/ALTERNATOR- V6 156
STARTER/ALTERNATOR- 75 TD 157
SWITCHES 158
INTERIOR 159
FOOT MAT 159
MISCELLANEOUS 160
BATTERY CHARGERS 160
FOOT MAT 161
FENDER PROTECTOR 162

Außenspiegel /Mirrors 75





1	*14031023*	*LEFT OUTSIDE MIRROR 75*	*On request*
2	*14031024*	*Außenspiegel rechts 75 manuell,blau es Glas,konvex,schwarz*	*On request*
3	*14031034*	*OE. 60530890 MIRROR RIGHT SIDE 75*	*On request*

Beleuchtung/Lightning 75



1	15126238	OE. 60526238 HEADLIGHT 75 RIGHT	On request
2	15126240	OE. 60526240 HEADLIGHT 75 LEFT	On request
3	15440850	RIGHT INDICATOR 75 YELLOW	€48.32
4	15440851	LEFT INDICATOR 75 YELLOW	€48.32
5	15441111	OE. 60741111 FLASHER 75 R	€50.34
6	15441112	OE. 60741112 FLASHER 75 L	€50.34
7	15228792	OE. 60528792 FOGLIGHT 33 (907), 75 RIGHT	On request
8	15228794	OE. 60528794 FOG LIGHT 33 (907), 75 LEFT	On request
9	15228793	OE. 60572893 FOG LIGHT RIGHT 75, 33 (905/7)	On request
10	15228795	OE. 60528795 FOG LIGHT LEFT 33 (907), 75	On request
11	1551828	OE. 60501828 SIDE FLASHER	€29.41
12	15326243	OE.60526243 LEFT REAR LIGHT 75 (INDICATOR YELLOW)	On request
13	15326242	OE.60526242 RIGHT REAR LIGHT 75 (INDICATOR YELLOW)	On request
14	15332805	OE.60532805,TAIL LIGHT 75, LEFT TURN LENS RED COLOR	On request
15	15332804	OE 60532804, TAIL LIGHT 75, RIGHT TURN LENS RED COLOR	On request
16	13343547	OE. 60543547 TAIL LAMP 75 RED	On request
17	13343548	TAIL LAMP BETWEEN REARLIGHTS 75 YELLOW	On request

Reparaturbleche/Repair Panels 75

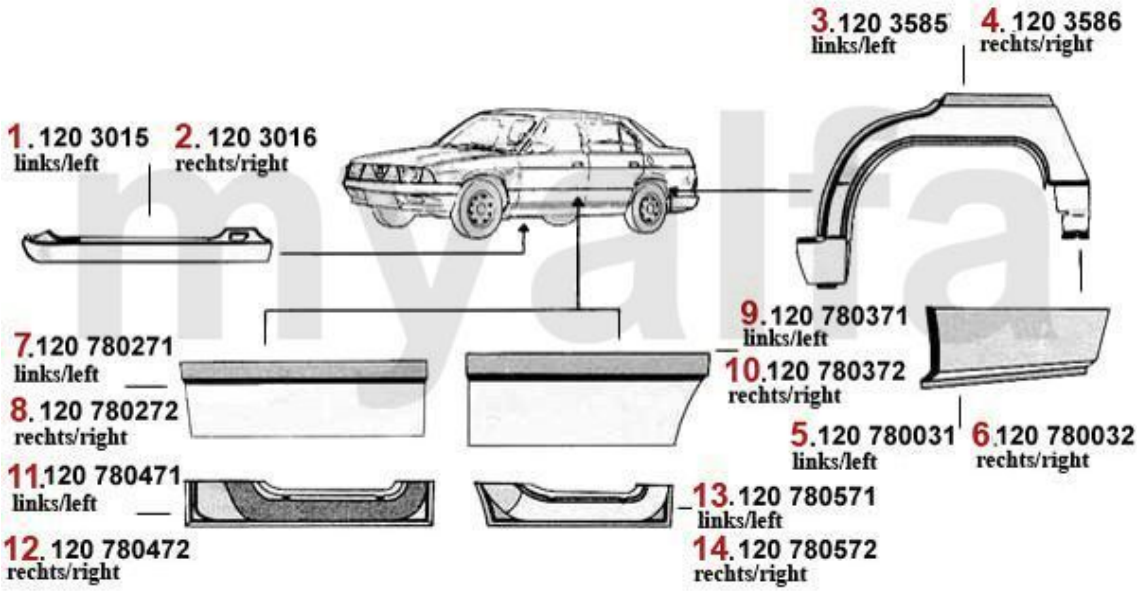

1	1203015	LEFT ROCKER PANEL 75	On request
2	1203016	RIGHT ROCKER PANEL 75	On request
3	1203585	REAR WHEEL ARCH 75 LEFT	€54.62
4	1203586	REAR WHEEL ARCH 75 RIGHT	€54.62
5	12080031	Anschlußblech links 75	On request
6	12080032	Anschlußblech rechts 75	On request
7	12080271	OUTER LEFT DOOR PANEL 75	€31.51
8	12080272	OUTER RIGHT DOOR PANEL 75	€31.51
9	12080371	Türblech außen HL 75	€18.99
10	12080372	Türblech außen HR 75	On request
11	12080471	FRONT LEFT DOOR BUTTOM PANEL 75	€18.99
12	12080472	FRONT RIGHT DOOR BUTTOM PANEL 75	€18.99
13	12080571	REAR LEFT DOOR BOTTOM REPAIR PANEL 75	€31.51
14	12080572	REAR RIGHT DOOR BOTTOM REPAIR PANEL 75	€31.51



1	1133285	Motorhaube 75	On request
2	1121101	OE. 60526495 FRONT FENDER 75 LEFT	€128.49
2	1121102	OE. 60526494 FRONT FENDER 75 RIGHT	€128.49
3	1113205	FRONT PANEL COMPL. 75 1.6/1.8	On request
4	1371940	BONNET STICK SUPPORT 75	€4.96

Stoßstangen/Bumpers 75



1	1360330	BADGE 75 mm ALFA ROMEO	€31.05
1	1360290	EMBLEM COVER 75MM SELF-ADHESIVE	€15.04
3	13222660	Kühlergrill 75 (grundiert)	€57.98
4	1313905	Stossfänger vorne 75	On request
5	13141341	Stoßfänger 75 vorne (Sport)	On request
6	13341350	Spoiler 75 vorne (Sport) kompl.	€361.26
7	13129671	OE. 60529671 Shield f. Bumper	On request
8	13129672	OE. 60529672 Shield f. Bumper	On request
9	1313955	REAR BUMPER 75	€254.37
10	13141241	Stoßfänger 75 hinten (Sport) kopl.	On request
11	13341246	REAR BUMPER SPOILER COMPL. 75	€421.60

Dichtgummis/Rubber Gasket 75

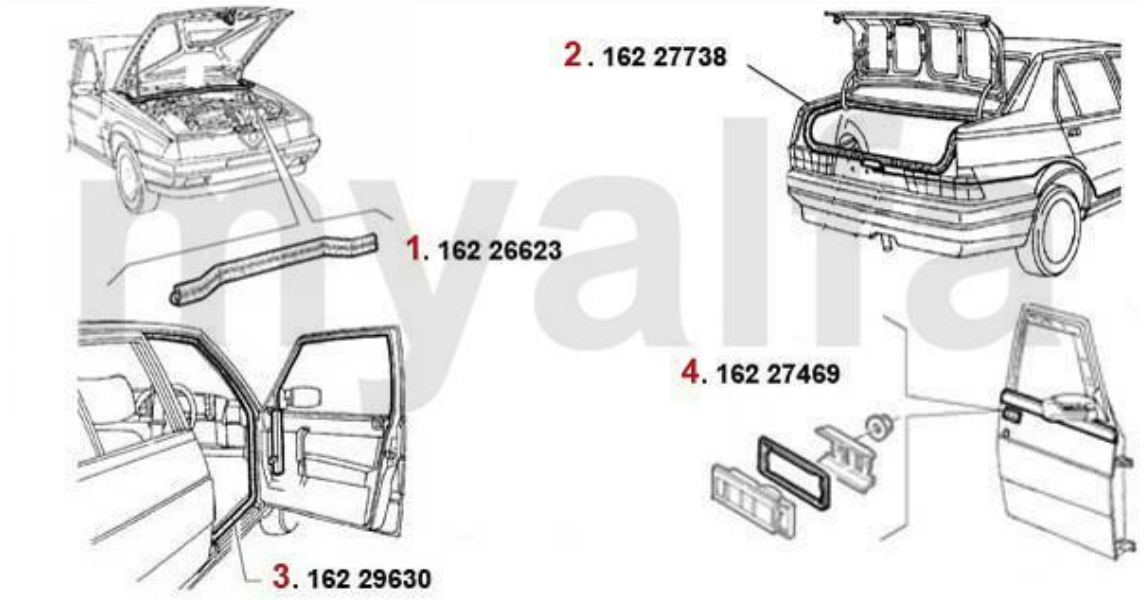

1	16226623	OE. 60526623 ENG. COMPARTMENT SEAL	€25.13
2	16227738	OE. 60527738 TRUNK RUBBER 75	€57.98
3	16229630	DOOR RUBBER FRONT OR REAR 75	€32.77
4	16227469	OE. 60527469 PLASTIC FRAME FOR OUTER DOOR HANDLE 75	€10.50

Car Cover 75/90

1. 911 108 0
rot/red

2. 911 274 0
blau/blue





1 ***9111080*** ***CAR COVER ECOLINE GIULIA, RED*** ***€49.58***

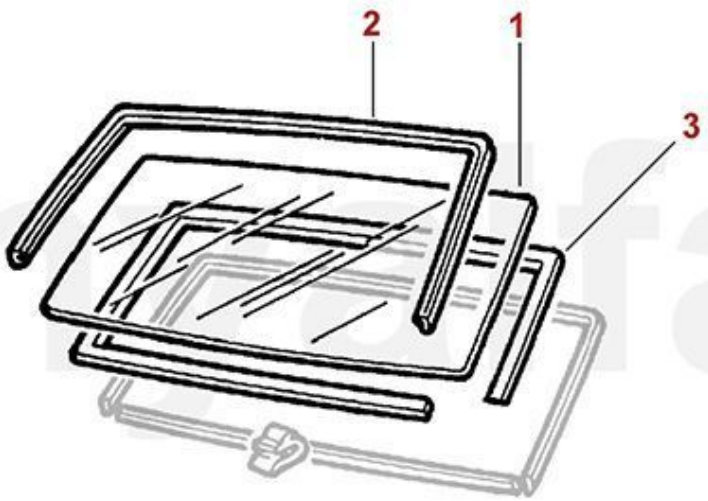

1	1340750	FRONT SCREEN AR 75, GREEN 2026 AGN	€402.52
2	16198485	SET OF RUBBER PROFILES FOR WINDSCREEN AR 75/164	€100.00
3	9700070	WINDOW SEALANT 310 ml	€24.29

Keilriemen/V-Belt 75 1.6/1.8/2.0/IE

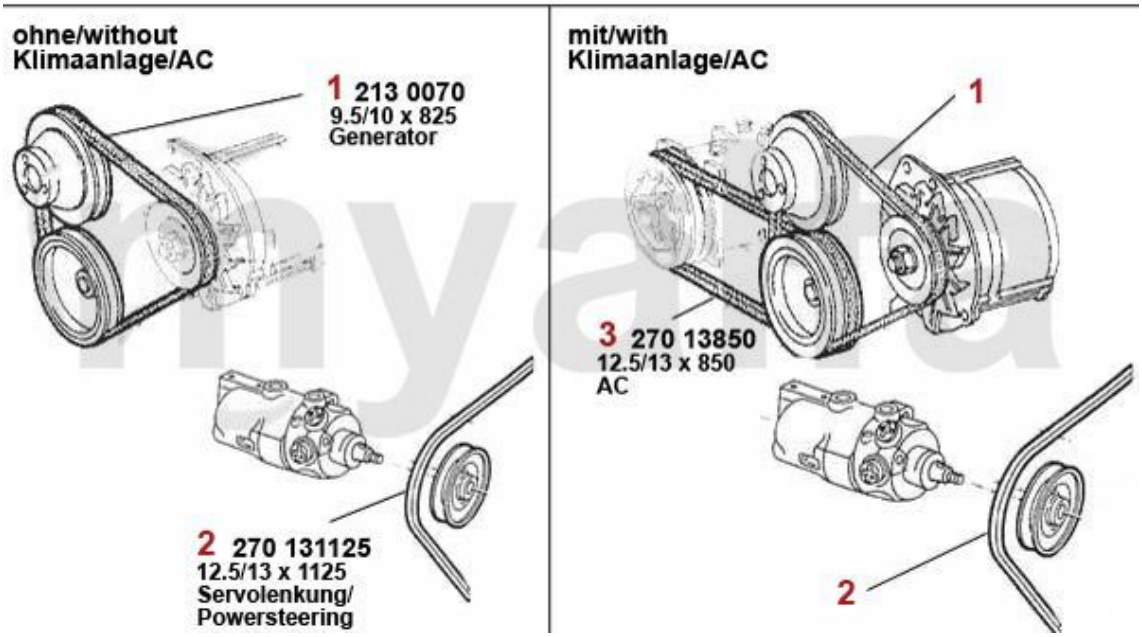

1	2700700	V-BELT 9.5x825	€7.48
2	27031125	OE. 60534452 V-BELT	€16.64
3	27013850	OE. 60805194 V-BELT	€14.71

Keilriemen/V-Belt 75 1.8 Turbo

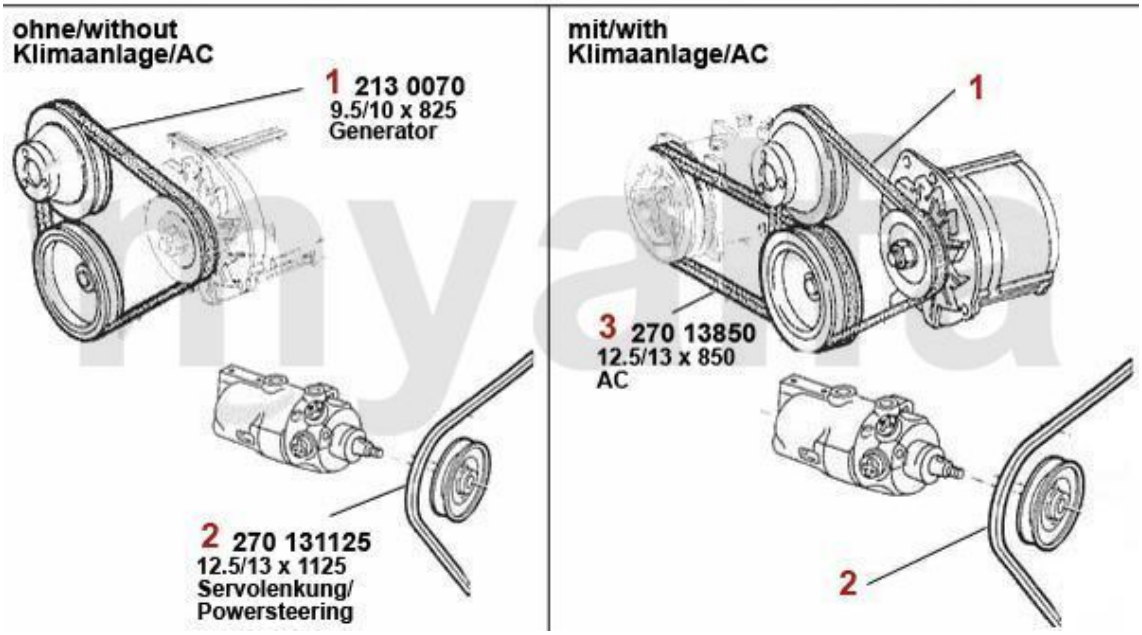

1	2700700	V-BELT 9.5x825	€7.48
2	27031125	OE. 60534452 V-BELT	€16.64
3	27013850	OE. 60805194 V-BELT	€14.71

Keilriemen/V-Belt 75 2.0 TS

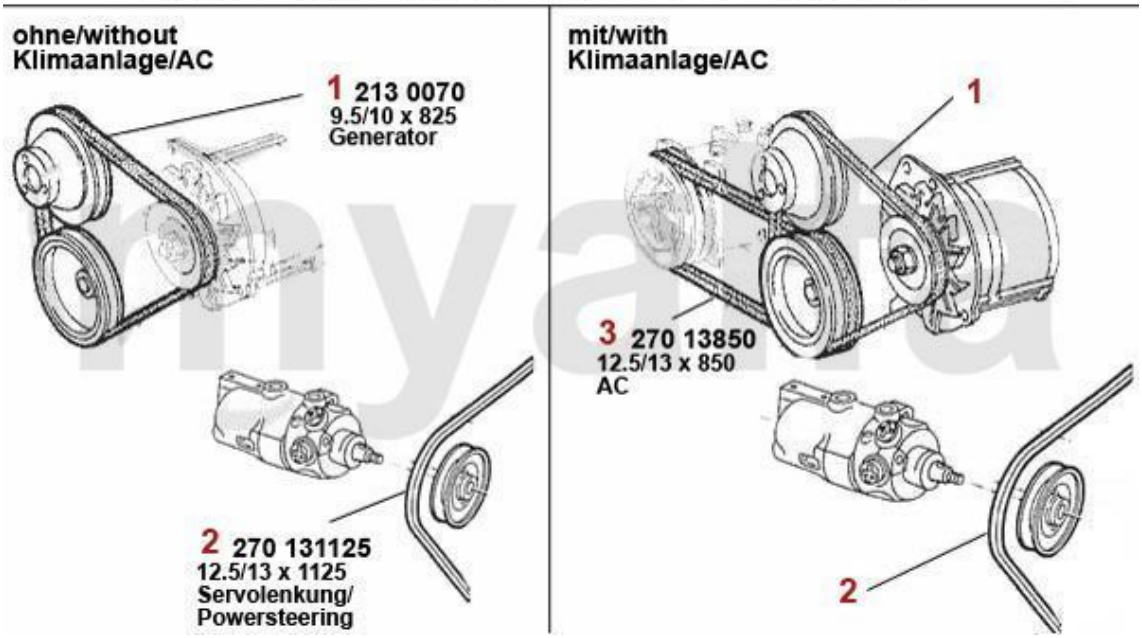

1	2700700	V-BELT 9.5x825	€7.48
2	27031125	OE. 60534452 V-BELT	€16.64
3	27013850	OE. 60805194 V-BELT	€14.71

Keilriemen/V-Belt 75 2.5/3.0 V6

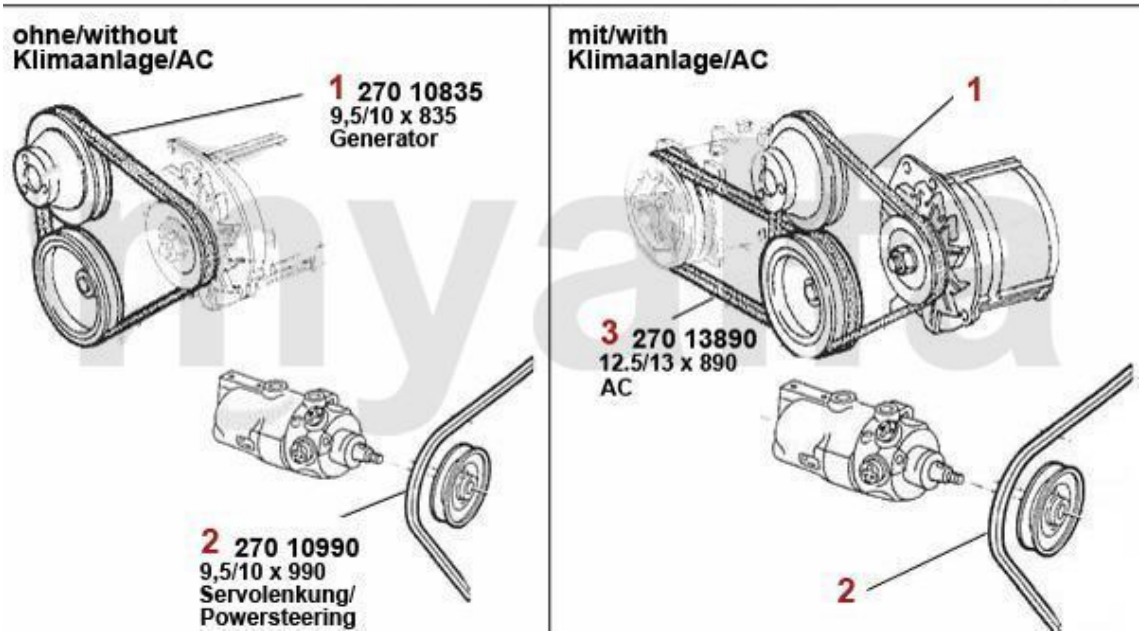

1	*27010835*	*OE. 60518176 V-BELT 10x835/838*	*€9.16*
2	*27010990*	*V-BELT POWER STEERING MONTREAL, 9,5 x 990*	*€13.36*
3	*27013890*	*OE. 60534863 V-BELT 13x888/890 AC*	*€13.78*

Keilriemen/V-Belt 75 2.0/2.4 TD

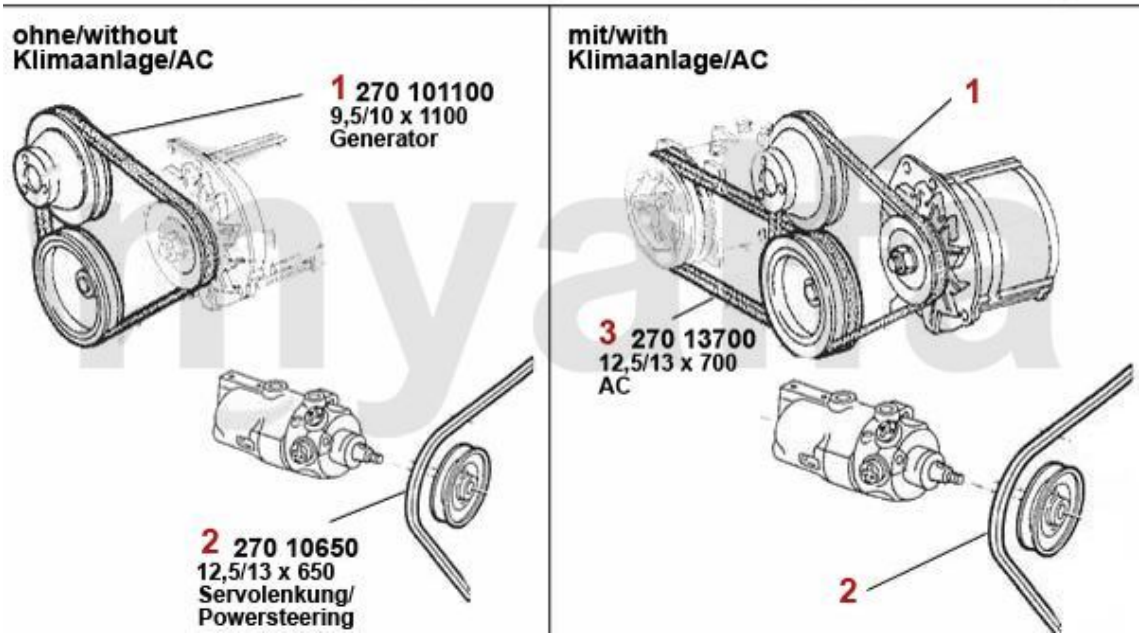

1	*27001100*	*V-BELT 9.5x1100 ALFETTA 75,90 2.4 TD*	*On request*
2	*27010650*	*Keilriemen 9.5x650 75 2.0/2.4 TD Servopumpe*	*€8.66*
3	*27013700*	*V-BELT 12.5x700 FOR A/C COMPRESSOR 75 2.0/2.4 TD*	*€16.76*

Kraftstoffpumpe/Fuel Pump 75 1.6/1.8/IE



1	2533046	FUEL PUMP (116) CARB. 1980>	€47.82
2	2530270	ELECTRICAL FUEL PUMP SPIDER 2000 IE 1986-93, ALFA 75 IE	€121.85
3	2580190	CONNECTION PIECE FUEL SENDER / FUEL PUMP SPIDER 1987 UP TO 1993 INJECTION MODEL, 75 4-CYLINDER IE	€20.59

Kraftstoffpumpe/Fuel Pump 75 2.0 TS

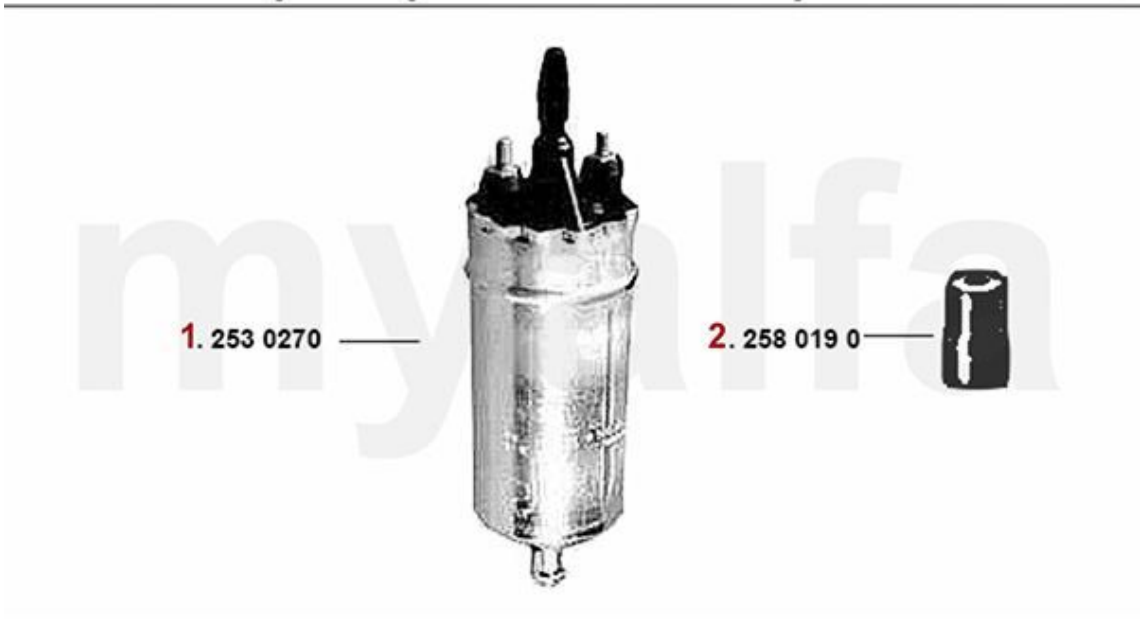

1	2530270	ELECTRICAL FUEL PUMP SPIDER 2000 IE 1986-93, ALFA 75 IE	€121.85
2	2580190	CONNECTION PIECE FUEL SENDER / FUEL PUMP SPIDER 1987 UP TO 1993 INJECTION MODEL, 75 4-CYLINDER IE	€20.59

Kraftstoffpumpe/Fuel Pump 75 2.5/3.0 V6

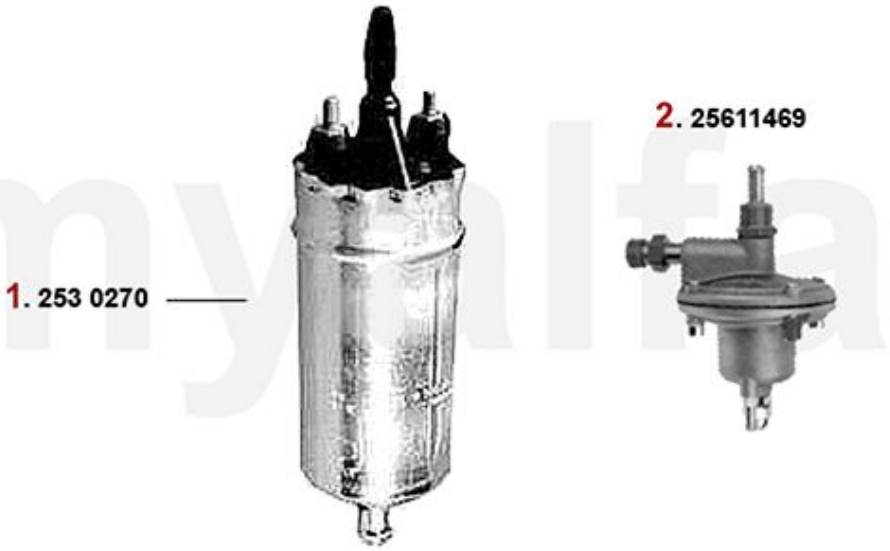

1	2530270	ELECTRICAL FUEL PUMP SPIDER 2000 IE 1986-93, ALFA 75 IE	€121.85
2	25611469	OE.60811469/60611308 FUEL PRESSURE REDUCER SCREW IN VERSION FOR VARIOUS MODELS	€116.81

Ansaugbrücke/Intake Manifold 75 1.6/1.8



1	2330160	INTAKE MANIFOLD GASKET 1600-2000 CARBURETTOR MODELS FROM 1968 ON	€11.43
4	2330350	HD CARBURETTOR MOUNT GASKET (8 PCS) 40 mm REINFORCED	€10.00
5	2520340	CARBURETTOR RUBBER MOUNT 45 mm	€29.41
6	2330770	HD CARBURETTOR MOUNT GASKET 45 mm TS-9003	€1.47
8	23358501	INTAKE MANIFOLD GASKET SPIDER 1600 1990-93	€15.88
9	2522384	DOUBLE CARBURETTOR RUBBER MOUNT 40 mm. 116 4-CYLINDER 06.1983>, SPIDER 1600 1990-93 PREMIUM QUALITY	€74.79
10	2522383	SINGLE CARBURETTOR RUBBER MOUNT 40 mm, 116 4-CYLINDER 06/1983>, SPIDER 1600 1990-93 PREMIUM QUALITY	€40.00
11	23318080	GASKET CARBURETTOR RUBBER MOUNT / INTAKE MANIFOLD SPIDER 1600 1990-93	€1.26

Einspritzanlage/Injection System 75 2.5/3.0 V6



1	25534953	OE. 60534953 RIGID SLEEVE 116 6-CYL.	€88.99
1	2562010	OE. 60523400 INJECTOR SPIDER 115 1986-1990	On request
2	25423386	OE. 60534959 AIR FLOW METER 2.5 V6 75, 90, 6, GTV6	On request
3	25623388	OE. 60523388 ELECTRO-VALVE 116 6-Cyl.	On request

Dichtungen Motor/Gaskets Engine 116 4-Cyl. Vergaser/Carb.

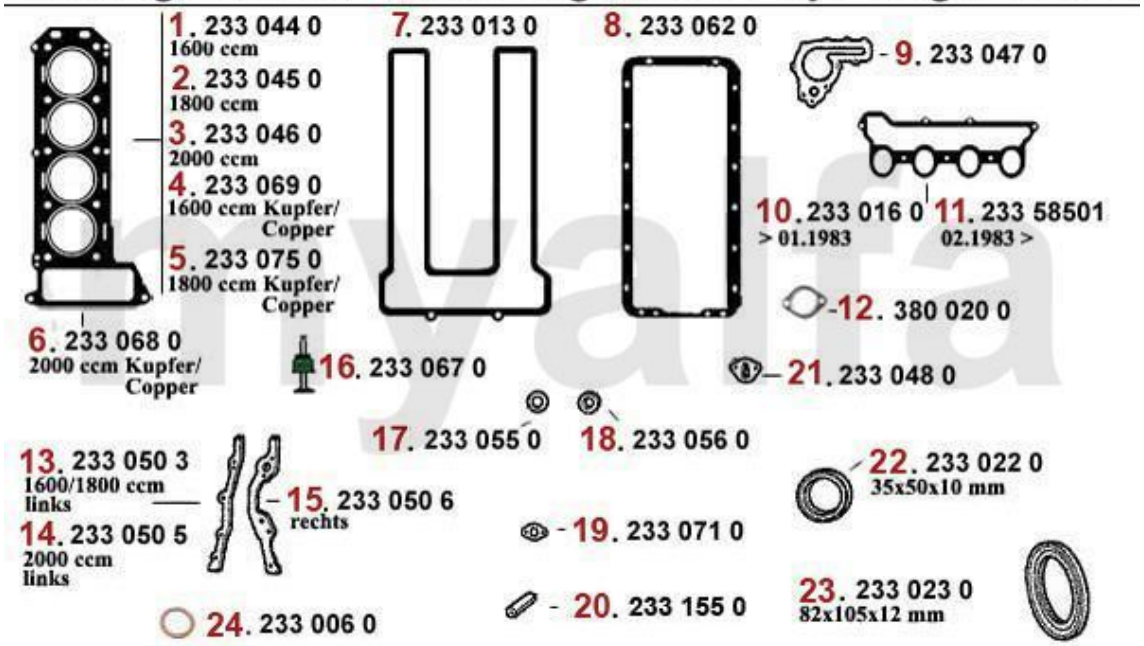

1	2330440	HEAD GASKET 1600 REINZ BEST QUALITY	€47.90
2	2330450	HEAD GASKET 1750 REINZ BEST QUALITY	€44.12
3	2330460	HEAD GASKET 2000 REINZ BEST QUALITY	€46.64
4	2330690	HEAD GASKET 1600 COPPER - 1.85 MM	€64.62
6	2330680	HEAD GASKET 2000 COPPER - 1,85MM	€64.62
7	2330130	CAM COVER GASKET WITH SILICONE STRIP	€22.10
7	2330650	VALVE COVER GASKET REINZ (2mm)	€39.41
8	2330620	UPPER SUMP GASKET WITH SILICONE STRIP	€27.65
9	2330470	WATERPUMP GASKET - 105, 115, 101 1600 - FOR MECHNICAL REV-COUNTER	€4.79
10	2330160	INTAKE MANIFOLD GASKET 1600-2000 CARBURETTOR MODELS FROM 1968 ON	€11.43
11	23358501	INTAKE MANIFOLD GASKET SPIDER 1600 1990-93	€15.88
12	3800200	GASKET CYLINDER HEAD / EXHAUST MANIFOLD	€3.11
16	2330670	VALVE SEAL reinforced inlet/black	On request
17	2330550	CAM COVER SCREW GASKET ALUMINIUM (SET 2PC) 750/101/102/106/105/116	€2.69
18	2330560	CAM COVER SCREW GASKET FIBRE	€4.96
19	2330710	GASKET REV COUNTER ALIGNMENT	€2.44
20	2331550	MAIN BEARING 'CIGARETTE' OIL SEAL	€3.32
21	2330480	PUEL PUMP GASKET	€2.02
22	2330220	OIL SEAL CRANK SHAFT FRONT 35/50/10	€7.98
23	2330230	OIL SEAL CRANK SHAFT REAR 82/105/12 750/101/105/115/116 UP TO 1989, OEM QUALITY	€27.65
24	2330060	SUMP PLUG WASHER SUMP / TRANSMISSION / DIFFERENTIAL	€1.34

Kopfdichtsatz/Headset 75 1.6/1.8/2.0/IE

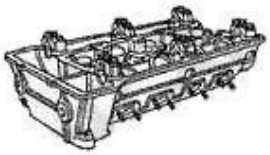

Achtung/Attention:
Dichtsatz ohne Kopfdichtung, bitte separat bestellen!/Headset without HEADGASKET, please order seperate!

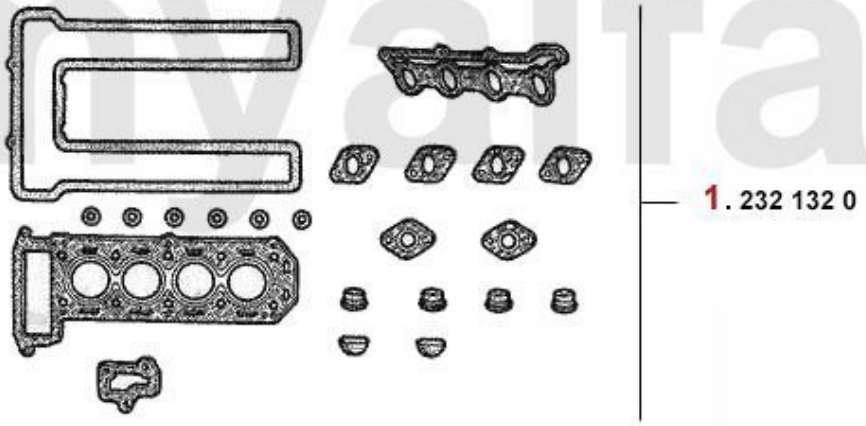

1	*2321320*	*HEAD GASKET SET WITHOUT CYLINDER HEAD GASKET CARBURETTOR FROM 1982 ON*	*€50.00*

Motordichtsatz/Full Set 75 1.6/1.8/2.0/IE



Achtung/Attention:

In den Dichtsätzen 231 0400 & 231 0410 sind Zylinderkopfdichtung und Wellendichtringe nicht enthalten, bitte separat bestellen!/ The sets 231 0400 & 231 0410 are without HEADGASKET and OILSEALS, please order it separate!

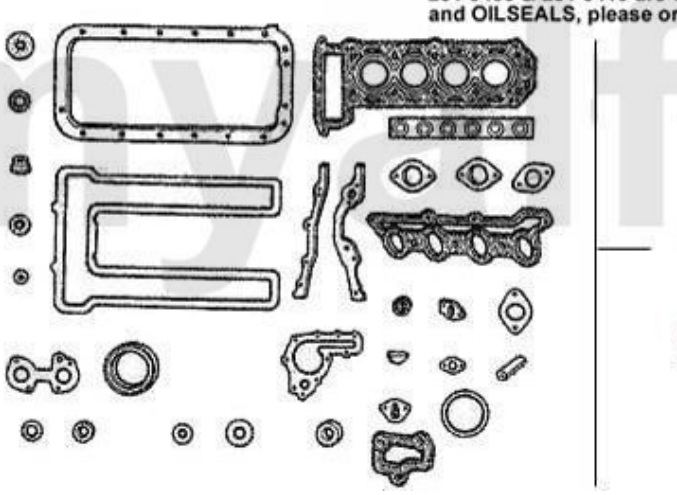

1	*2310400*	*ENGINE GASKET SET 1600 WITHOUT HEAD GASKET AND OIL SEALS*	*On request*
2	*23142200*	*OE. 60778180 FULL SET*	*€189.83*
3	*2310410*	*ENGINE GASKET SET 2000 WITHOUT HEAD GASKET AND OIL*	*On request*

Dichtungen Motor/Gaskets Engine 75 1.8 Turbo

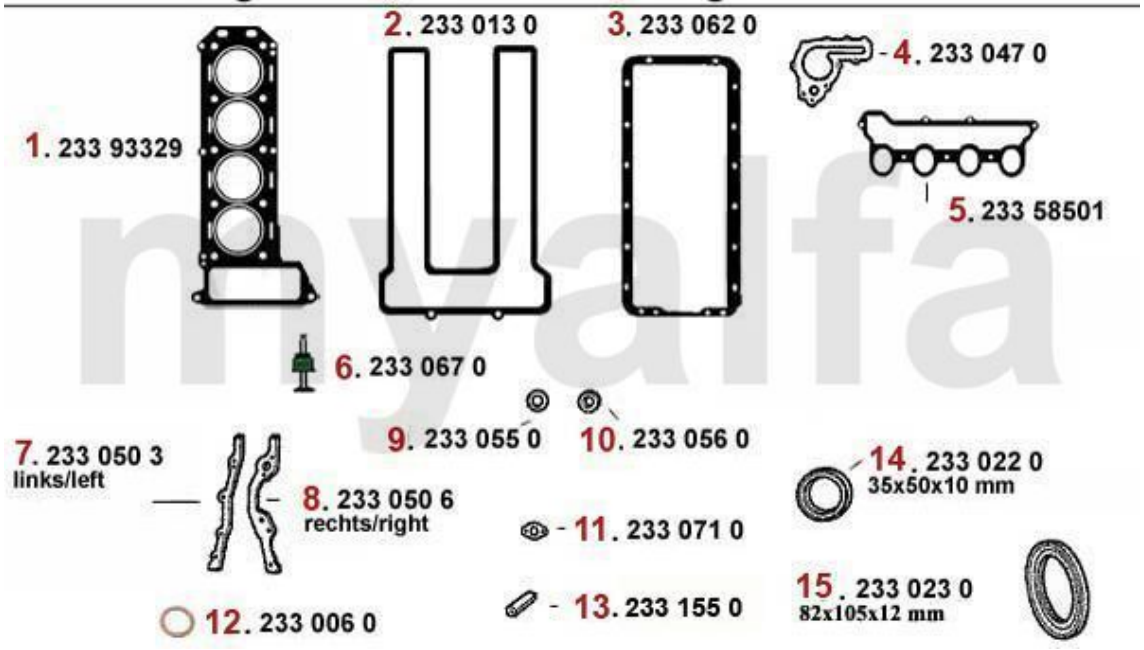

1	23393329	OE. 60593329 HEADGASKET 1.8 TURBO, REINZ / GLASER	€74.79
2	2330130	CAM COVER GASKET WITH SILICONE STRIP	€22.10
2	2330650	VALVE COVER GASKET REINZ (2mm)	€39.41
3	2330620	UPPER SUMP GASKET WITH SILICONE STRIP	€27.65
4	2330470	WATERPUMP GASKET - 105, 115, 101 1600 - FOR MECHNICAL REV-COUNTER	€4.79
5	23358501	INTAKE MANIFOLD GASKET SPIDER 1600 1990-93	€15.88
6	2330670	VALVE SEAL reinforced inlet/black	On request
9	2330550	CAM COVER SCREW GASKET ALUMINIUM (SET 2PC) 750/101/102/106/105/116	€2.69
10	2330560	CAM COVER SCREW GASKET FIBRE	€4.96
11	2330710	GASKET REV COUNTER ALIGNMENT	€2.44
12	2330060	SUMP PLUG WASHER SUMP / TRANSMISSION / DIFFERENTIAL	€1.34
13	2331550	MAIN BEARING 'CIGARETTE' OIL SEAL	€3.32
14	2330220	OIL SEAL CRANK SHAFT FRONT 35/50/10	€7.98
15	2330230	OIL SEAL CRANK SHAFT REAR 82/105/12 750/101/105/115/116 UP TO 1989, OEM QUALITY	€27.65

Motordichtsatz/Full Set 75 1.8 Turbo

1. 231 42600

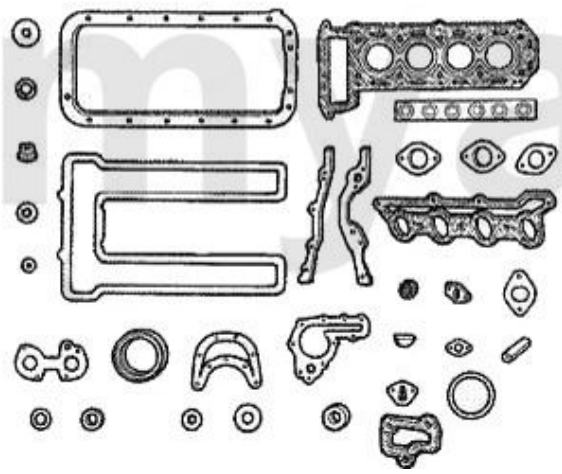



1	*23142600*	*FULL ENGINE GASKET SET 75 1.8 ie Turbo, INCL. HEADGASKET*	*€335.29*

Dichtungen Motor/Gaskets Engine 75 2.0 TS

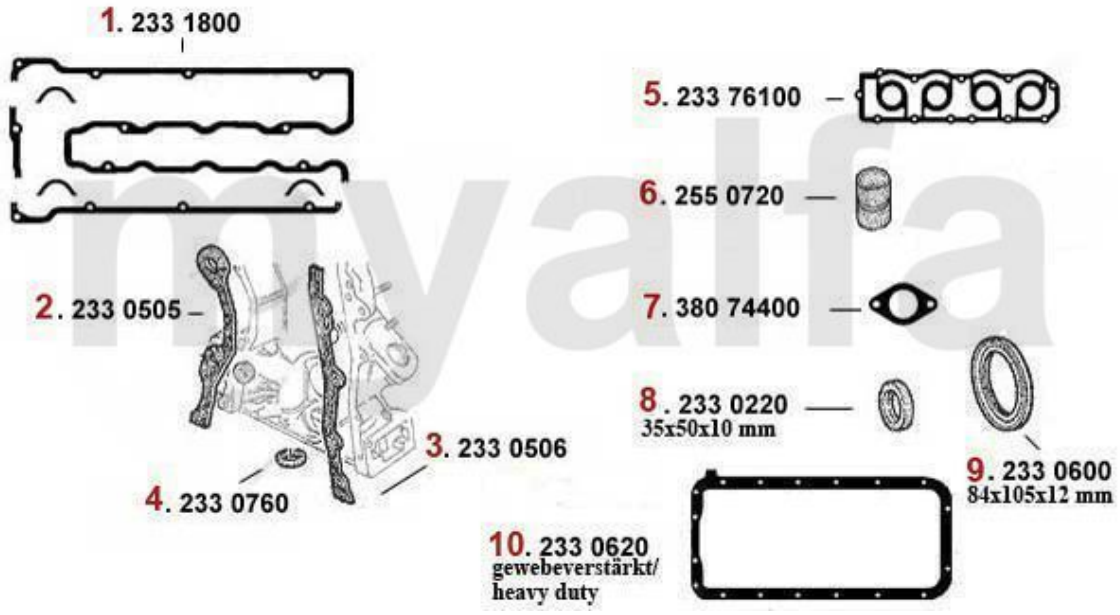

1	2331800	OE. 60513316 VALVE COVER GASKET SET	€23.78
4	2330760	O-RING TIMING COVER 101/105/115/116	€4.12
5	23376100	OE. 60558499 GASKET	€15.55
6	2550720	HOSE INTAKE MANIFPLD / AIR BOX SPIDER 2000 IE 1990-93	€10.00
7	38074400	OE. 60507576 GASKET	€5.46
8	2330220	OIL SEAL CRANK SHAFT FRONT 35/50/10	€7.98
9	2330600	OIL SEAL CRANK SHAFT REAR 84/105/12 SPIDER IE 1990-93 ORIGINAL QUALITY	€29.33
10	2330620	UPPER SUMP GASKET WITH SILICONE STRIP	€27.65

Kopfdichtsatz/Head Set 75 2.0 TS

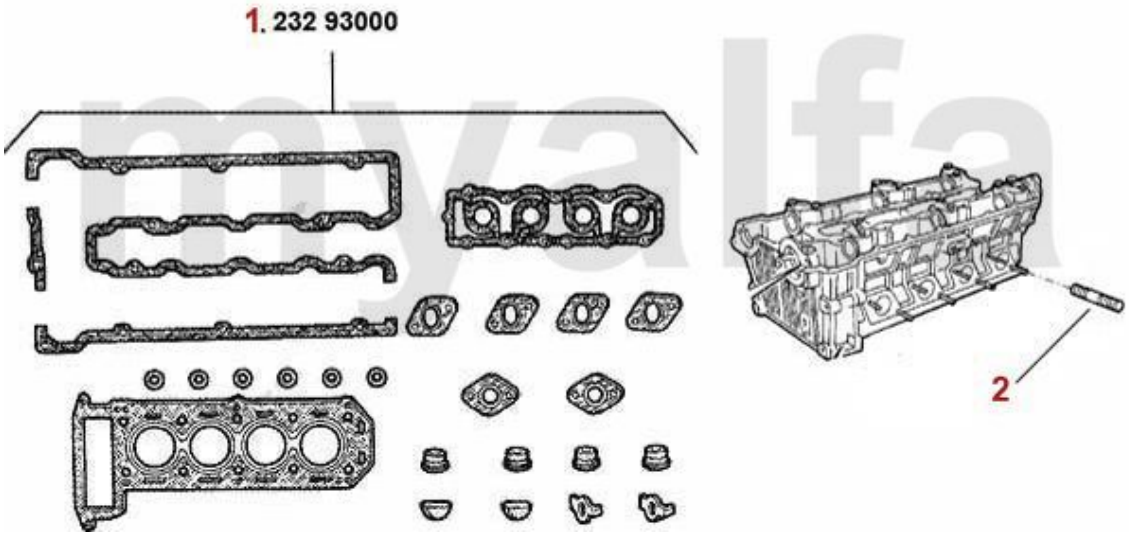

1	23293000	HEAD GASKET SET REINZ O.E.:60777999	€167.23
2	2281030	STUD HEAD - EXHAUST 75TS	On request

Motordichtsatz/Full Set 75 2.0 TS

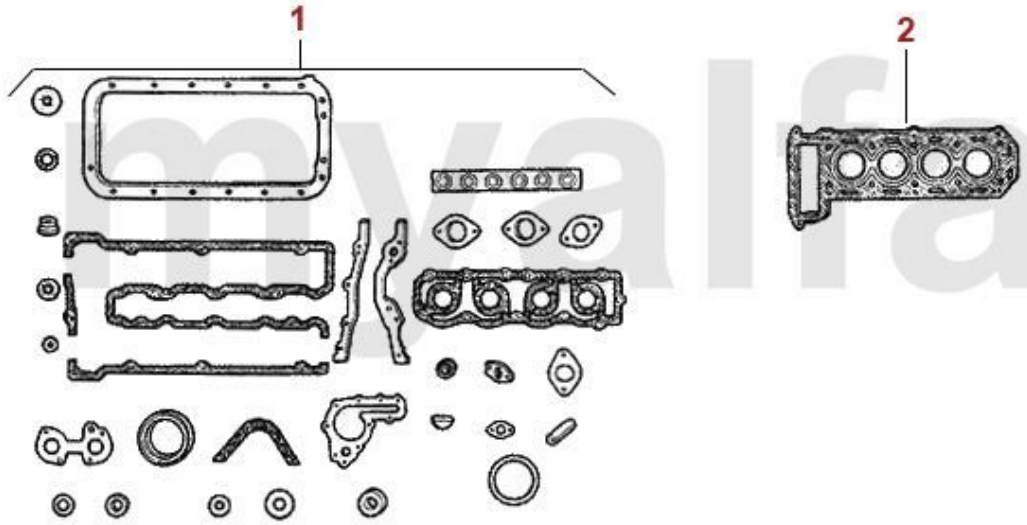

1	2315801	MOTOR GASKET REINZ FULL SET 75 2.0 TS 8V	€251.68
2	2331040	OE: 60560916 HEAD GASKET TS	€58.40

Dichtungen Motor/Gaskets Engine 75 2.5/3.0 V6



1	23324600	OE. 60512948 RIGHT VALVE COVER GASKET	€33.53
2	23324700	OE. 60512949 LEFT VALVE COVER GASKET SET	€33.53
3	23310800	Seal for Camshaft #606 10 985/561 03 085	€10.50
4	23320800	OE. 60777089 GASKET	€4.12
5	3806636	OE. 60506636 EXHAUST MANIFOLD GASKET	€5.46
6	23323600	OE. 60567605/7 Sealing Gasket	€16.39
7	2330600	OIL SEAL CRANK SHAFT REAR 84/105/12 SPIDER IE 1990-93 ORIGINAL QUALITY	€29.33
8	2332550	VALVE SEAL REINZ	€4.12
9	25223379	OE. 60523379 RUBBER HOSE f.	€12.52
10	23311871	OE. 96411871 SEALING GASKET ÖLSUMP 116 6-CYLINDER	€28.99
11	23307294	OE. 60507294 RUBBER RING f. SPARK PLUG SHAFT V6/12V	€4.96

Kopfdichtsatz/Head Set 75 2.5/3.0 V6

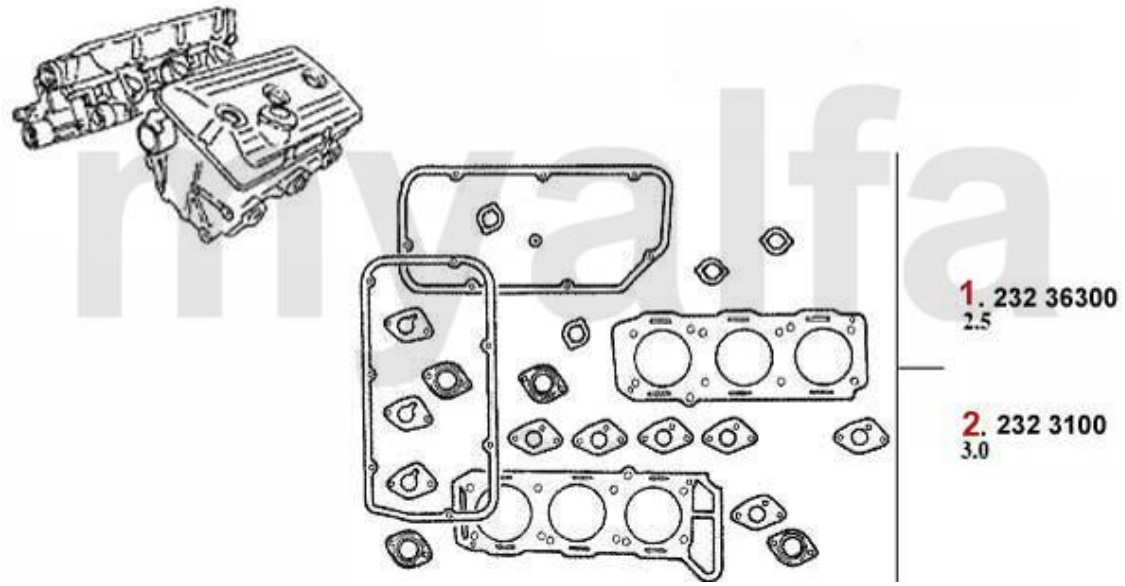

1	*23236300*	*OE. 60777249 REINZ O/H-SET WITH HEAD GASKET 6-CYLINDER*	*€247.90*
2	*2323100*	*OE. 60777986 HEAD SET*	*€176.05*

Motordichtsatz/Full Set 75 2.5/3.0 V6

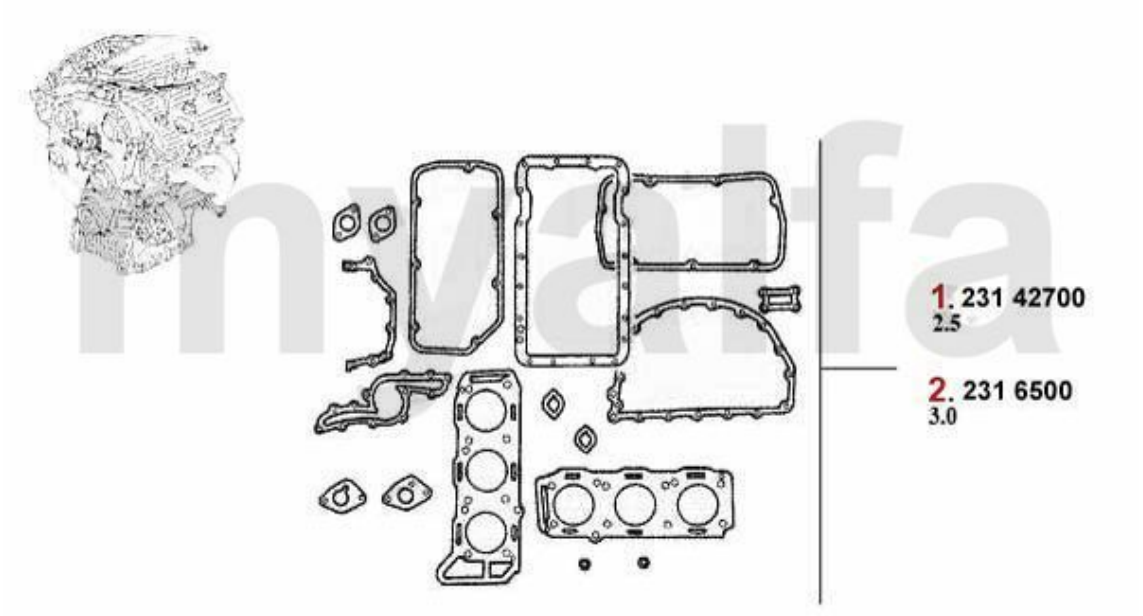

1	*23142700*	*OE. 60777987/60777618 FULL SET V6 2.5, 8 VALVE*	*€360.92*
2	*2316500*	*OE. 60777989 AJUSA FULL SET*	*€411.68*

Dichtungen Motor/Gaskets Engine 75 2.0/2.4 TD



1. 233 79100



2. 233 83742



3. 380 32812

1	*23379100*	*Ventildeckeldichtung 75 2.0 TD,90 2.4 TD, 155,164/Super 2.5 TD, Alfetta 2.4 TD*	*€19.41*
2	*23383742*	*OE. 6057172 GASKET*	*On request*
3	*38032812*	*OE. 60507172 GASKET*	*€3.03*

Kopfdichtung/Head Gasket 75 2.0/2.4 TD

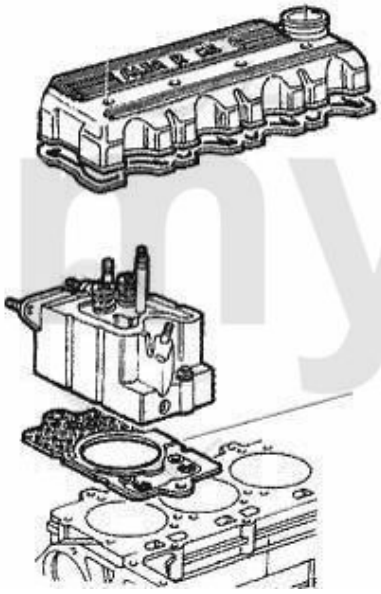

Achtung/Attention:

Beim Bestellen der Kopfdichtung bitte auf die entsprechende Markierung achten!
Before you order the headgasket, please note the marking!

1. 233 11500
1.42 mm

2. 233 11510
1.52 mm

3. 233 11520
1.62 mm

1	*23311500*	*OE. 60507788 HEAD GASKET*	*€45.80*
2	*23311510*	*OE. 60605899 HEAD GASKET TD*	*€45.80*
3	*23311520*	*OE.60507157 HEAD GASKET*	*€45.80*

Kopfdichtsatz/Head Set 75 2.0/2.4 TD

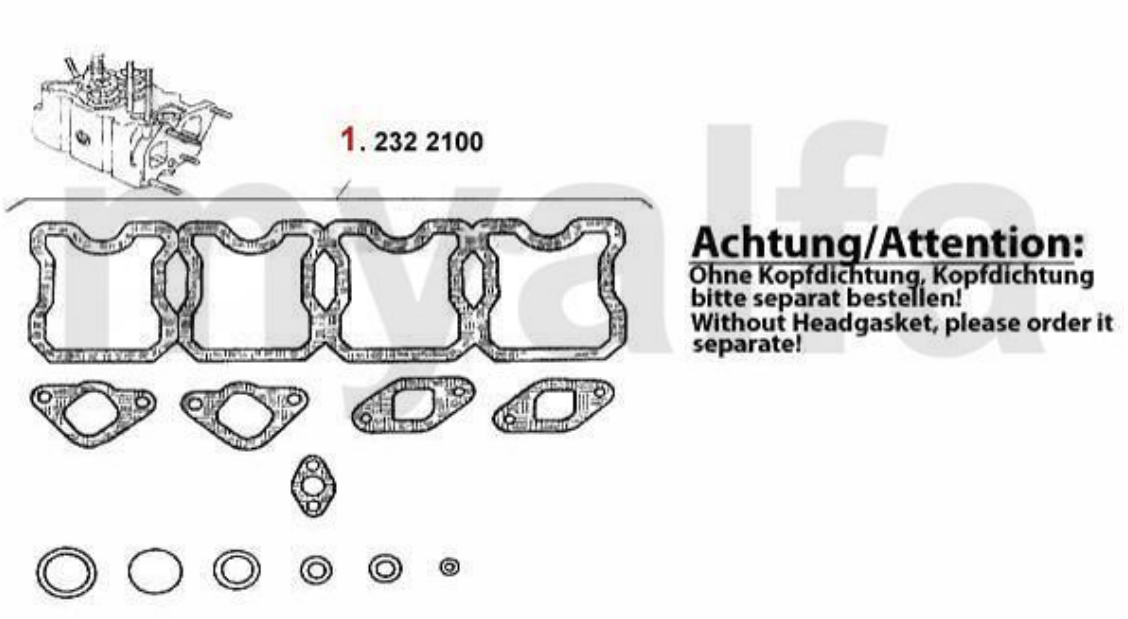

1	***2322100***	***Kopfdichsatz Alfetta,75,90 2.0/2.4 TD Bj. 83-92 ohne Kopfdichtung***	***€37.56***

Kopfschraubensatz/Head Screw Set 75 2.0/2.4 TD

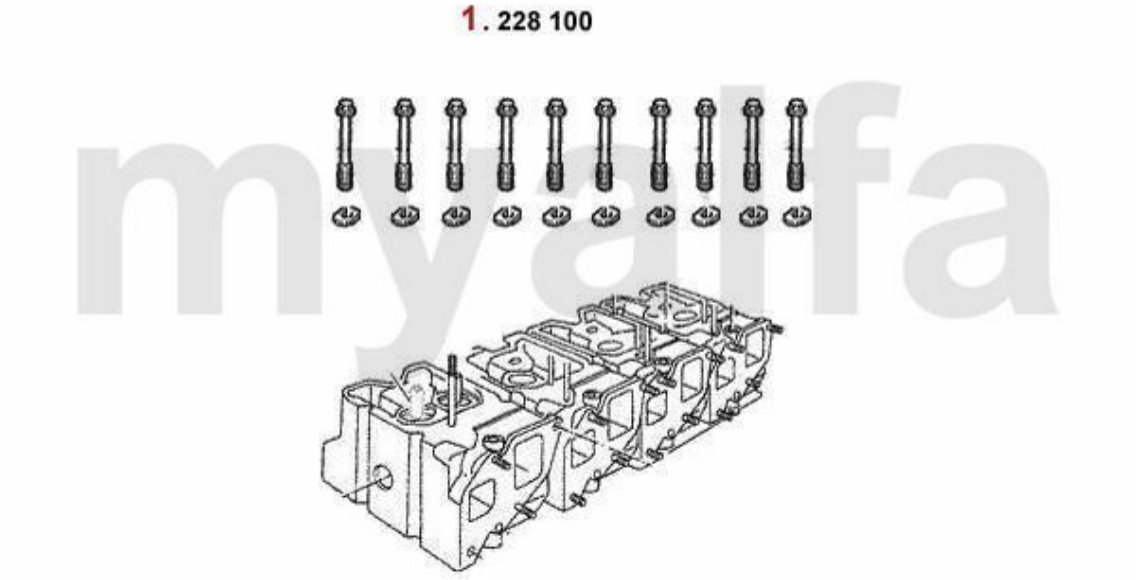

1	*228100*	*OE. 60572819 HEAD SCREW SET*	*On request*

0	*2333490*	*XXL UNIVERSAL KIT FOR DIY GASKET MADE BY REINZ*	*€29.41*

Kühler/Radiator 75 1.6/1.8/2.0/IE

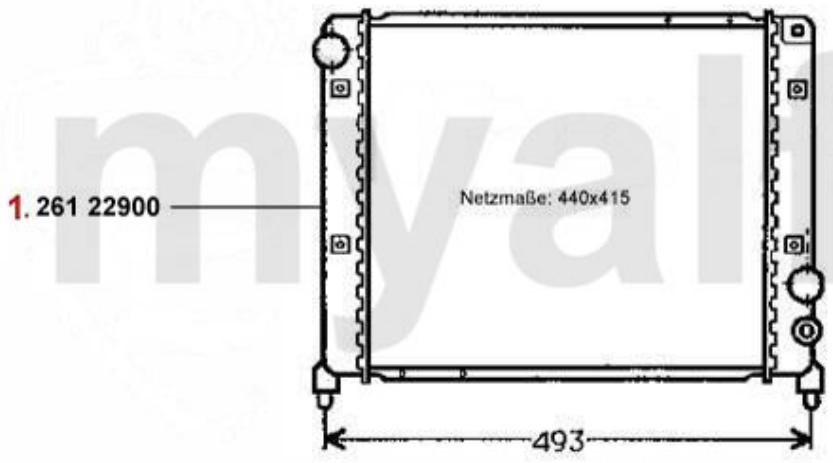

1 ***26122900*** ***OE. 60526047 RADIATOR*** ***On request***

Thermostat 75 1.6/1.8/IE



1	*2630090*	*OE. 60516212 / 60713535 THERMOSTAT 2000 IN HOUSING CARBURETTOR MODELS*	*€31.85*
2	*2630540*	*THERMOSTAT 2000 IN HOUSING INJECTION MODELS*	*€39.41*
3	*2331220*	*O-RING FOR THERMOSTAT HOUSING SPIDER MK4 / 75 2.0 IE*	*€4.03*

Wasserpumpe/Waterpump 75 1.6/1.8/2.0/IE



1	*262510*	*OE. 60730469/60523035 WATERPUMP 75, ALFETTA, GIULIETTA, GTV (116), WITH PULLEY, WITHOUT REV METER CONNECTION*	*€66.39*
2	*2620430*	*WATER PUMP 2000 IE ELECTRIC FAN*	*€96.64*

Ausgleichsbehälter/Expansion Tank 75



1	***26533762***	***OE.60533762 COMPENSATIONTANK***	***€83.19***

Kühler/Radiator 75 1.8 Turbo

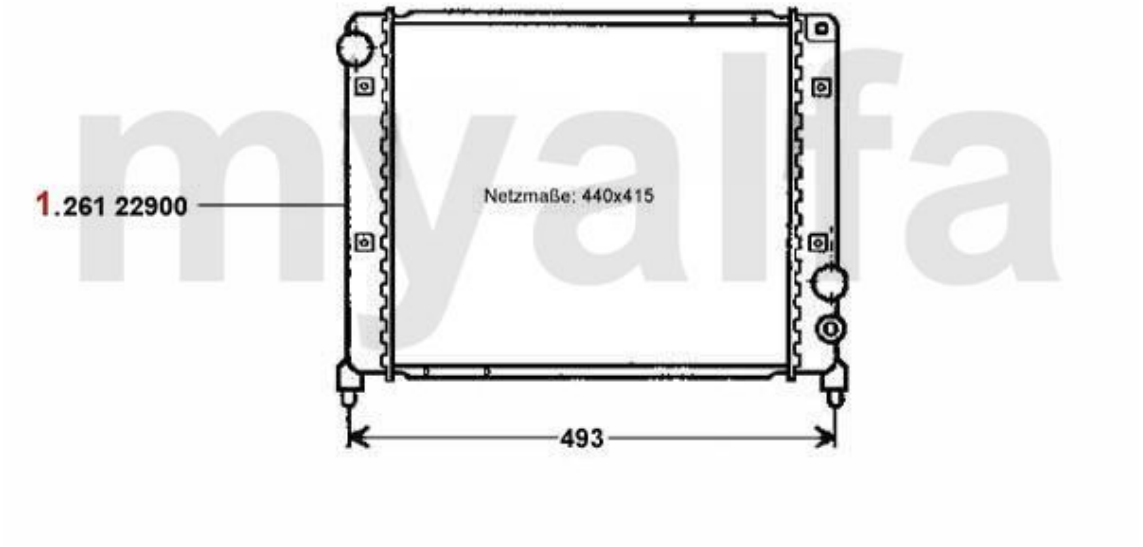

1 ***26122900*** ***OE. 60526047 RADIATOR*** ***On request***

Thermostat 75 1.8 Turbo



1 ***26396483*** ***OE. 60534691 THERMOSTAT 75 1.8 Turbo, 2.0 TS*** ***On request***

Wasserpumpe/Waterpump 75 1.8 Turbo



1	*262510*	*OE. 60730469/60523035 WATERPUMP 75, ALFETTA, GIULIETTA, GTV (116), WITH PULLEY, WITHOUT REV METER CONNECTION*	*€66.39*

Ausgleichsbehälter/Expansion Tank 75



1	*26533762*	*OE.60533762 COMPENSATIONTANK*	*€83.19*

Kühler/Radiator 75 2.0 TS

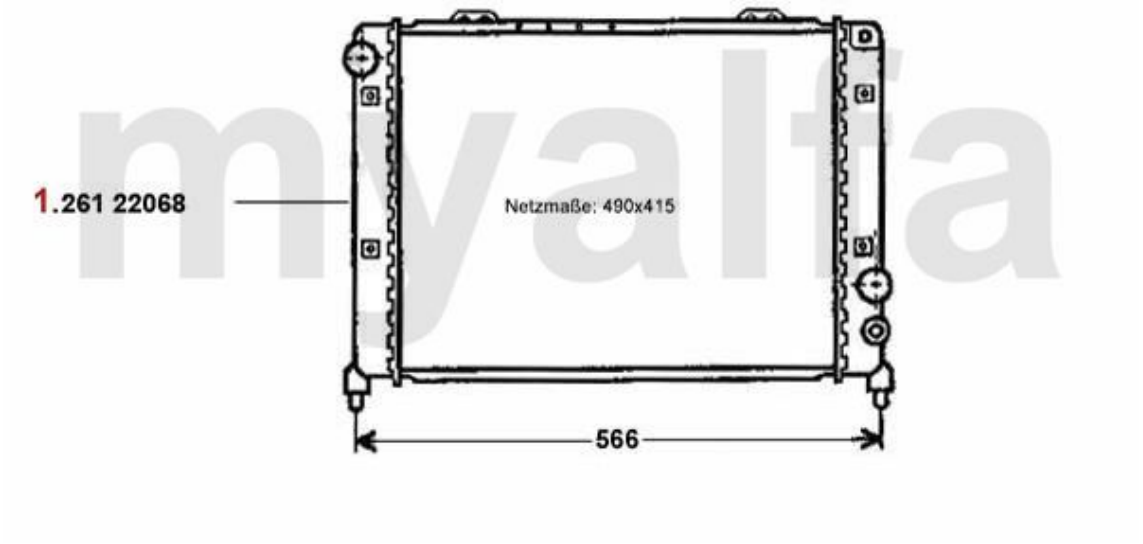

1 ***26122068*** ***OE. 60507819 RADIATOR 75/90 2.0 TS/2.5 V6/3.0 V6, 164 2.0 TS*** ***€248.66***

Thermostat 75 2.0 TS



1	*26396483*	*OE. 60534691 THERMOSTAT 75 1.8 Turbo, 2.0 TS*	*On request*

Wasserpumpe/Waterpump 75 2.0 TS

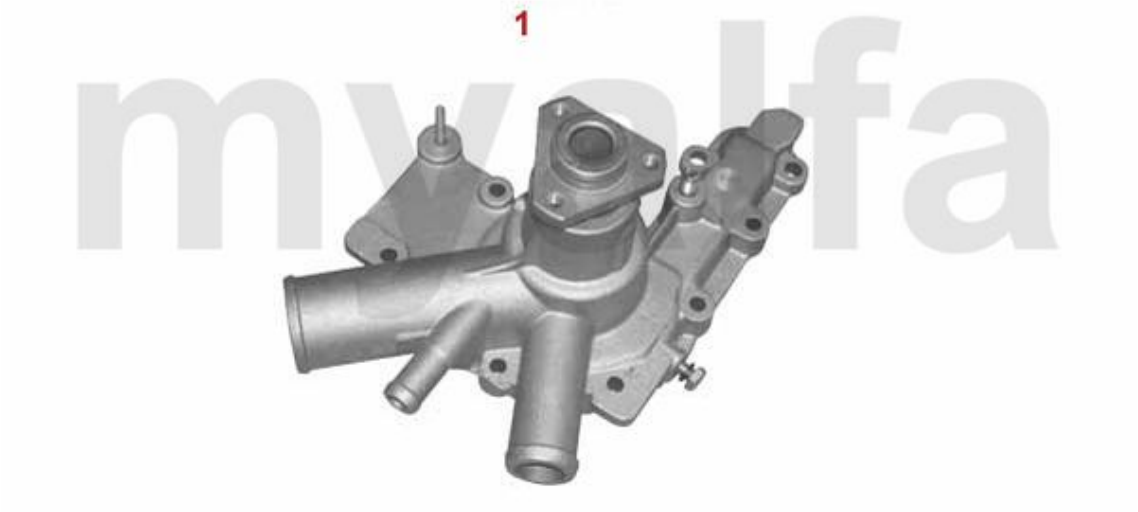

1	*2620430*	*WATER PUMP 2000 IE ELECTRIC FAN*	*€96.64*

Ausgleichsbehälter/Expansion Tank 75



1	*26533762*	*OE.60533762 COMPENSATIONTANK*	*€83.19*

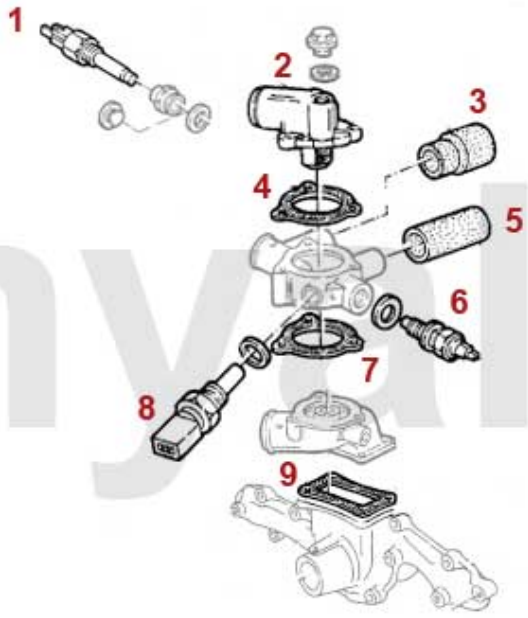

1	25623385	OE. 60523385 TEMPERATURE SENDER	€184.03
2	26323250	OE. 60523250 THERMOSTAT GTV6, 75 V6, RZ, SZ	€41.18
3	2668355	OE. 60573501 RADIATOR HOSE	€18.40
4	2337415	OE. 60507415 THERMOSTAT GASKET	€3.28
5	2668356	OE. 60573501 RADIATOR HOSE	€18.40
6	8626024	OE. 60605959 SENDING UNIT	€32.77
7	2337416	OE. 60507416 GASKET WATERPUMP/DISTRIBUTOR HOUSING FOR THERMOSTAT #60559862	€5.00
8	86260183	OE. 60523383 SENDING UNIT 6, 75 V6, ALFETTA 2.4 TD, GTV6 (116)	€29.33
8	86260145	OE. 60808142/60800167 SENDING UNIT	€23.03
9	23315713	OE. 60615713 SEALING GASKET WATERPUMP THERMOSTAT HOUSING	€3.03

Wasserpumpe/Waterpump 75 2.5/3.0 V6





1	*262610*	*OE. 60555345 WATERPUMP 6 2.0/2.5 ie, 75 2.5/3.0 V6, 90 2.0/2.5 ie, GTV6 (116)*	*€125.21*
2	*262910*	*OE.60555347 WATERPUMP V6/12V*	*€117.56*

Ausgleichsbehälter/Expansion Tank 75



1	*26533762*	*OE.60533762 COMPENSATIONTANK*	*€83.19*

Kühler/Radiator 75 2.5/3.0 V6

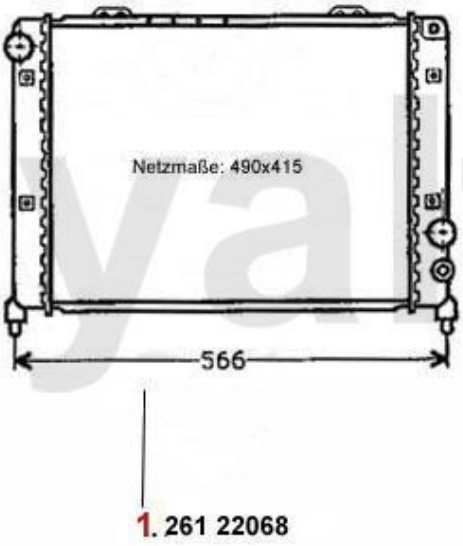

1	26122068	OE. 60507819 RADIATOR 75/90 2.0 TS/2.5 V6/3.0 V6, 164 2.0 TS	€248.66
2	26428370	SPAL ELECTIC FAN GTV6, 75 MILANO - PULLER	€100.76
3	2640030	HOLDER FOR SPAL ELECTRIC FAN MOUNT LATERAL ON FRAME	€10.84

Kühler/Radiator 75 2.0/2.4 TD

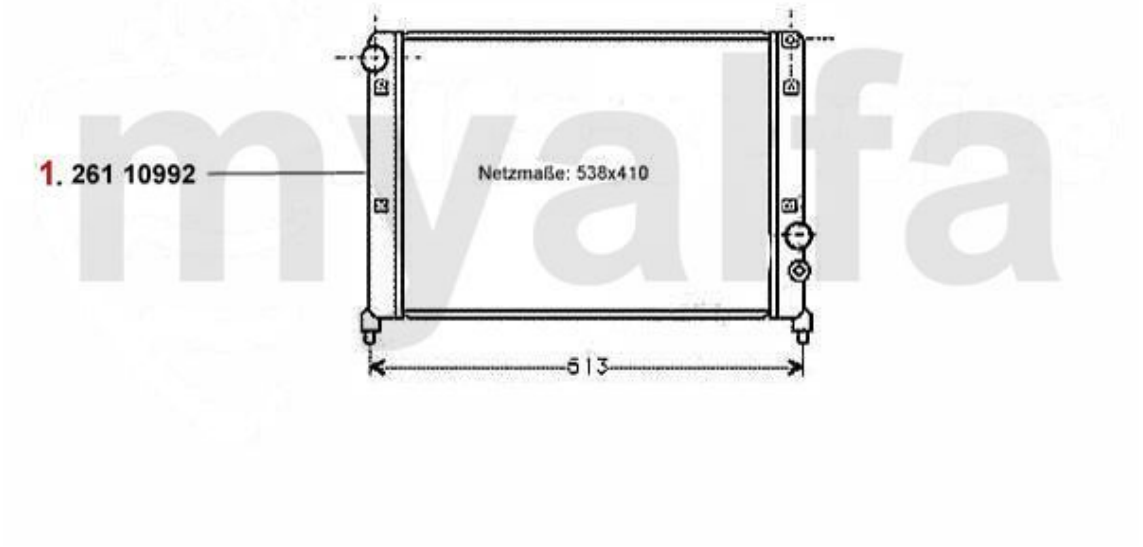

1	*26110992*	*Motorkühler 75,90 2.0/2.4 TD*	*On request*

Thermostat 75 2.0/2.4 TD



1	*26328883*	*Thermostat 75,90,164 2.0/2.4/2.5 TD Gehäusethermostat*	*On request*

Wasserpumpe/Waterpump 75 2.0/2.4 TD



1	*262710*	*OE. 60561806 WATERPUMP*	*€99.16*

Motorlager/Enginemount 75 1.6/1.8/2.0/IE

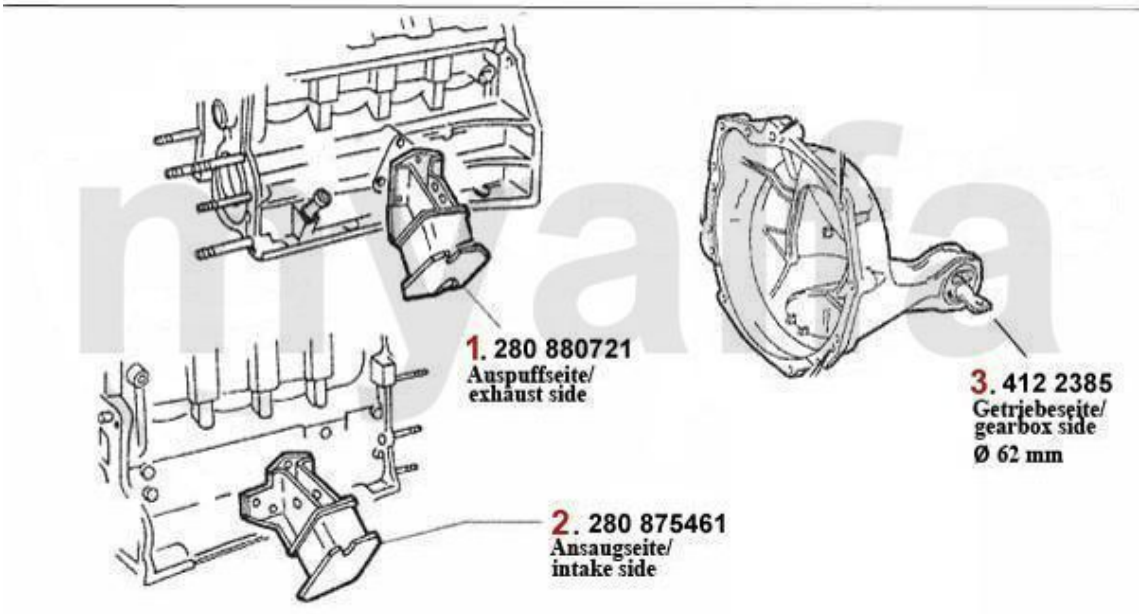

1	28080721	OE. 60723675 ENGINE MOUNT LEFT 116 4-CYL.	€49.41
2	28075461	OE. 60521085 ENGINE MOUNT RIGHT 116 4-CYL.	€49.41
3	4122385	OE. 60522199 ENGINE MOUNT REAR 4 CYL.	€27.31

Motorlager/Enginemount 75 1.8 Turbo

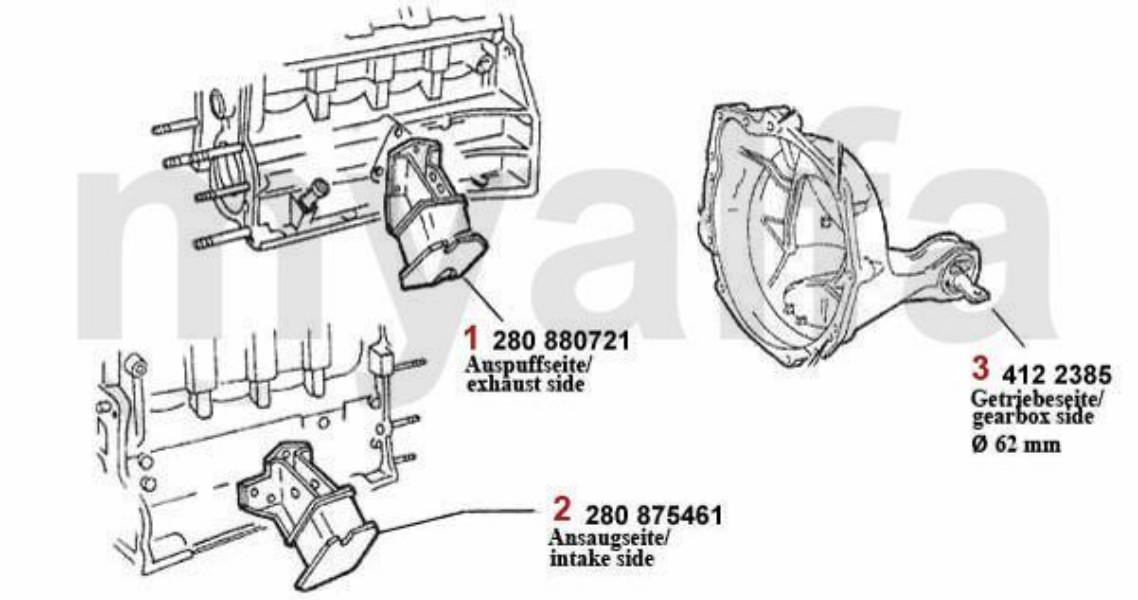

1	*28080721*	*OE. 60723675 ENGINE MOUNT LEFT 116 4-CYL.*	*€49.41*
2	*28075461*	*OE. 60521085 ENGINE MOUNT RIGHT 116 4-CYL.*	*€49.41*
3	*4122385*	*OE. 60522199 ENGINE MOUNT REAR 4 CYL.*	*€27.31*

Motorlager/Enginemount 75 2.0 T.S.

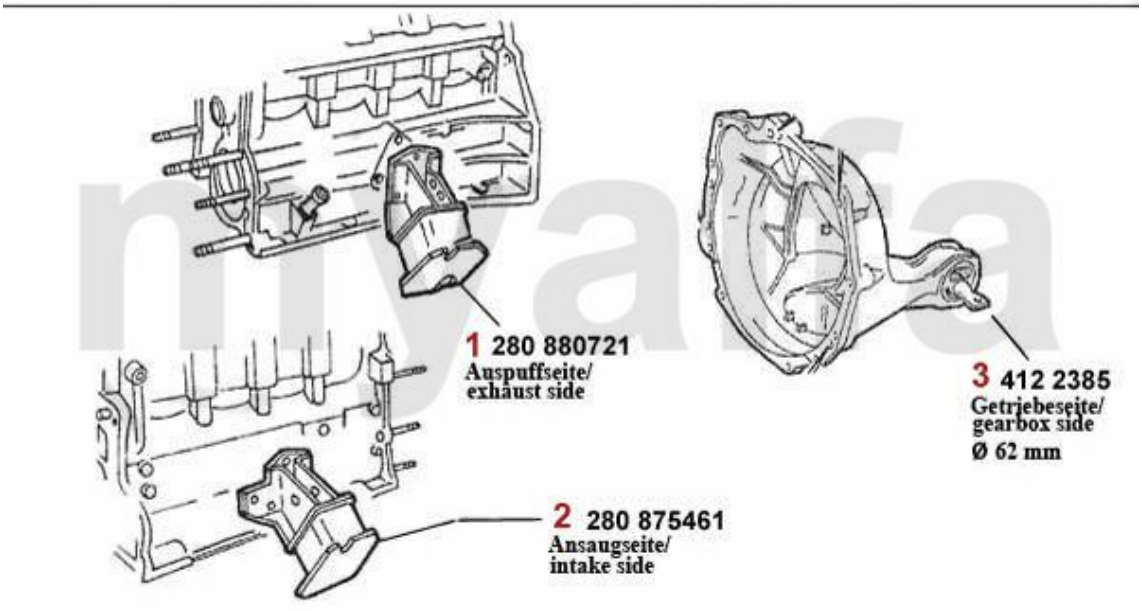

1	*28080721*	*OE. 60723675 ENGINE MOUNT LEFT 116 4-CYL.*	*€49.41*
2	*28075461*	*OE. 60521085 ENGINE MOUNT RIGHT 116 4-CYL.*	*€49.41*
3	*4122385*	*OE. 60522199 ENGINE MOUNT REAR 4 CYL.*	*€27.31*

Motorlager/Enginemount 75 2.5/3.0 V6

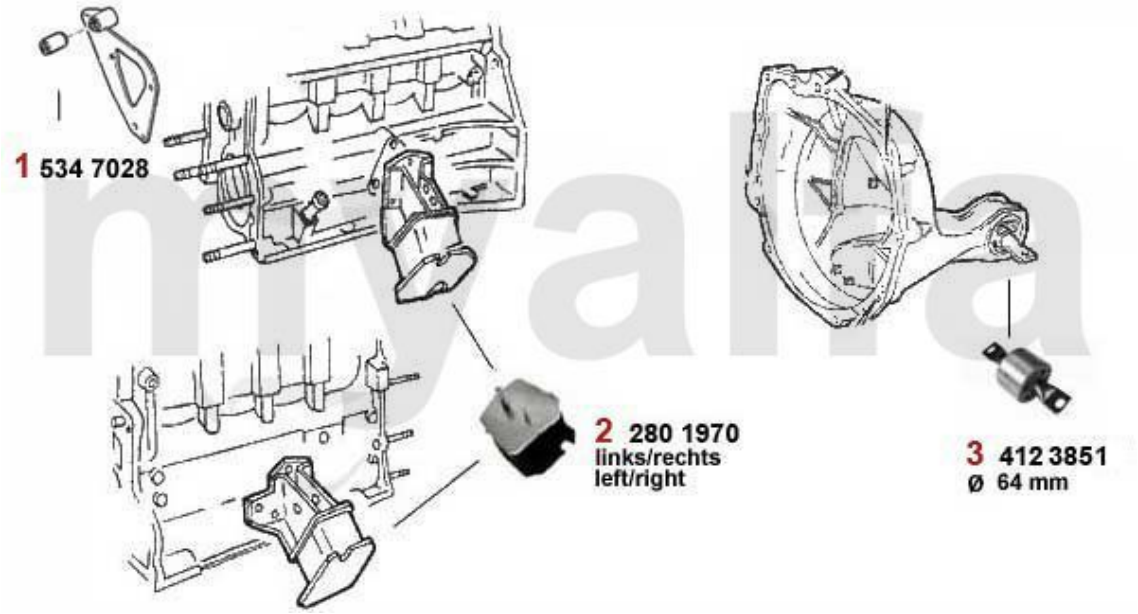

1	*5347028*	*OE. 60507028 Silent Block*	*On request*
2	*2801970*	*ENGINE MOUNT LEFT/RIGHT GTV6, 75 V6, RZ/SZ*	*€38.32*
3	*4123851*	*OE. 60522581 REAR ENGINE MOUNT75, 90, GTV6 (116), SZ,RZ (64 mm)*	*€30.67*

Motorlager/Enginemount 75 2.0/2.4 TD

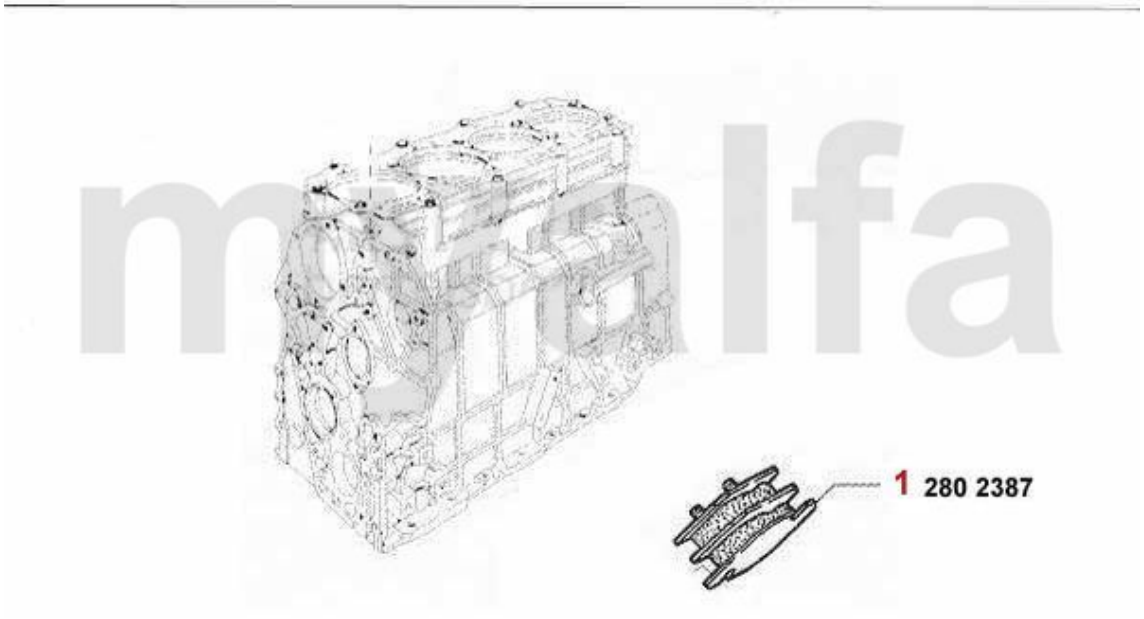

1	*2802387*	*Motorlager vorne Alfetta/Giulietta, 6,75,90 TD*	*€40.76*

Nockenwelle/Camshaft 75 1.6/1.8/2.0/IE

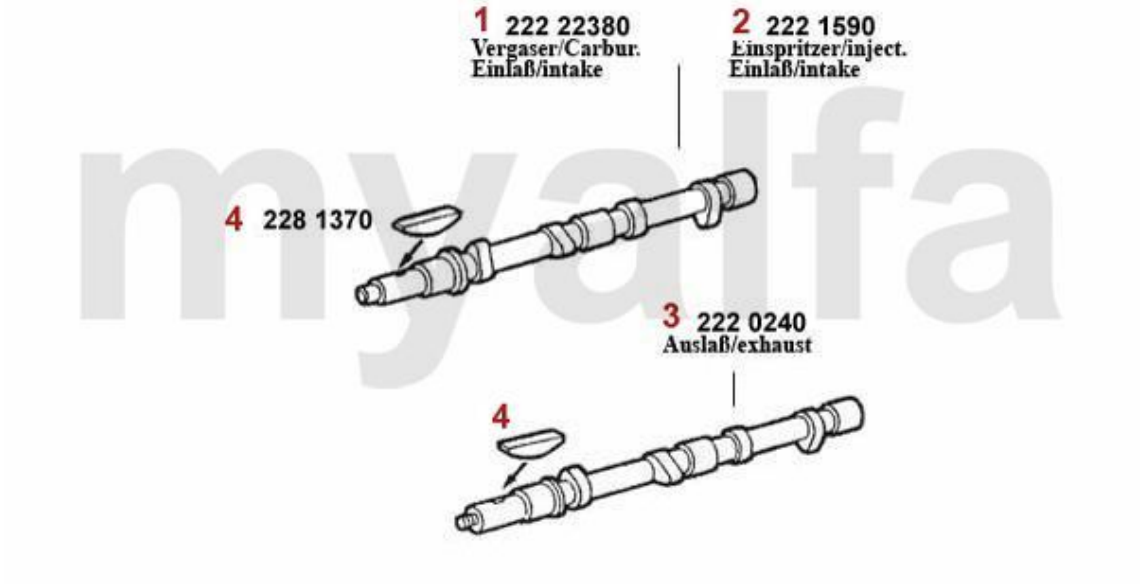

1	22222380	Nockenwelle (Einlass) 75, Spider '90 (115),Alfetta, Giulietta 1.6/1.8 Vergaser	€419.75
2	2221590	CAMSHAFT INTAKE SPIDER 1990-93 INJECTION	On request
3	2220240	CAMSHAFT 1750/2000 CARBURETTOR / SPIDER 1990-93 INJECTION EXHAUST ONLY	On request
4	2281370	WEDGE CAMSHAFT	€11.34

Steuerkette/Timing Chain 75 1.6/1.8/2.0/IE

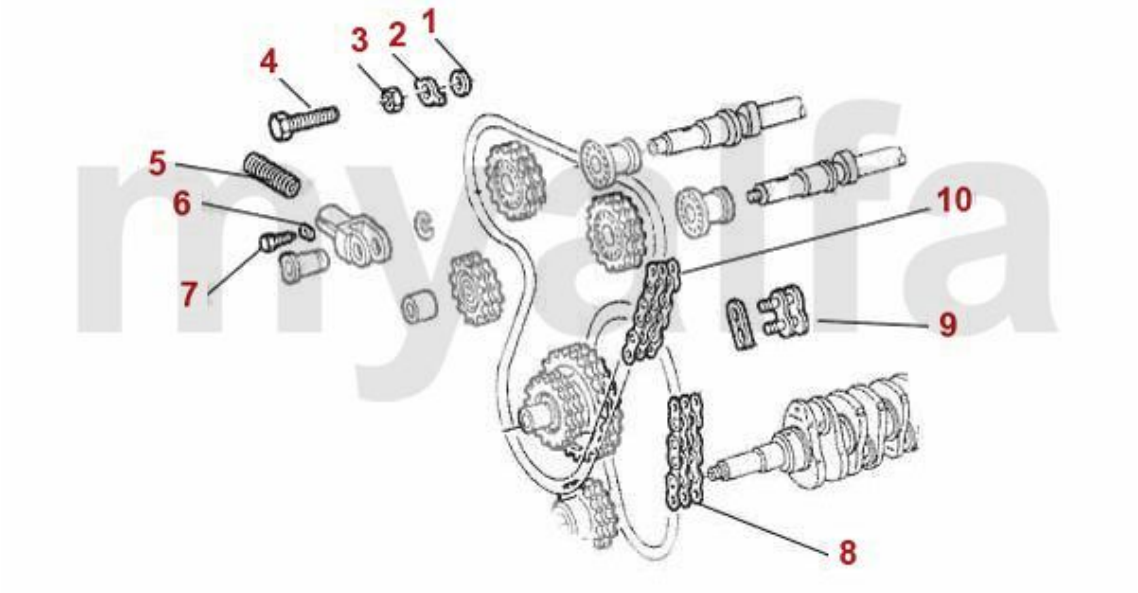

1	2421220	WASHER TIMING CHAIN SPROCKET	On request
2	2281230	TAB WASHER CAMSHAFT	€2.10
3	2421210	NUT TIMING CHAIN SPROCKET	€1.85
4	2280980	SAFETY SCREW CAMSHAFT	€2.94
5	2421200	CHAIN TENSIONER SPRING	€6.22
6	2421000	CHAIN TENSIONER LOCKING BLOCK	€4.62
7	2421010	CHAIN TENSIONER SCREW	€5.80
8	2410470R	TIMING CHAIN 1300 -2000 SHORT IWIS RACING	€62.10
8	2410470	BOTTOM TIMING CHAIN 1300-2000 WITHOUT LINK	€23.11
8	2410470I	TIMING CHAIN IWIS 1300-2000 SHORT ENDLESS	€49.58
9	2410480	TIMING CHAIN LINK	€6.30
10	2412490R	TIMING CHAIN 1600 IWIS RACING	€88.15
10	2410460R	TIMING CHAIN 1750/2000 IWIS RACING	€88.15
10	2412490I	TIMING CHAIN IWIS 1600 LONG WITH LINK	€75.55
10	2410460I	TIMING CHAIN IWIS 1750-2000 WITH LINK	€83.95
10	2412490	TOP TIMING CHAIN 1600 WITH LINK	€35.80
10	2410460	TOP TIMING CHAIN 1750-2000 WITH LINK	€35.80

Ventiltrieb/Valve Train 75 1.6/1.8/2.0/IE

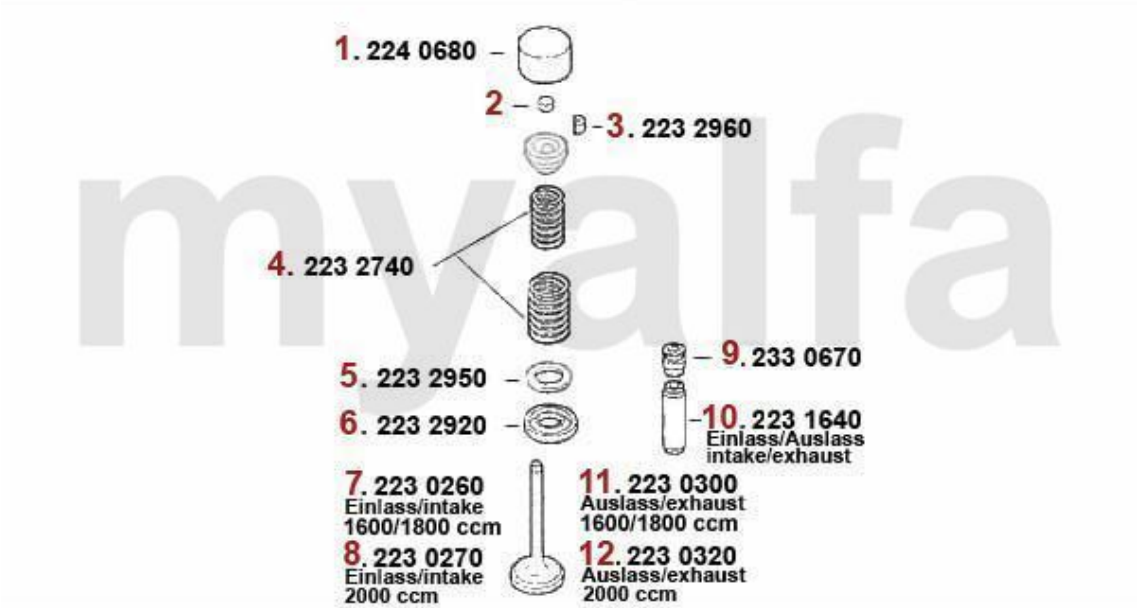

1	2240680	CAM FOLLOWER OE-QUALITY 101/105/115/116/75/155/164	€16.39
1	2240710	CAM FOLLOWER DLC RACING MADE IN ITALY 101/105/115/116/75/164	€36.89
2	2431140	SET VALVE SHIMS 200 PIECES 2,525 - 3,5 mm, DIAMETER 9mm	€469.75
2	2430840	SET VALVE SHIMS 205 PIECES 1,5 - 2,5 mm, DIAMETER 9mm	€469.75
2	2430430	VALVE SHIM 9MM PLEASE SUBMIT THE SIZE YOU NEED	€10.42
3	2232960	VALVE COTTER 9MM	€1.60
4	2232740	SET VALVE SPRINGS 16 PIECES	€75.55
5	2232950	SHIM VALVE CUP / SPRING	€2.98
6	2232920	VALVE SPRING CUP	On request
7	2230260	INTAKE VALVE 1600-1750 41 mm	€13.36
8	2230270	INTAKE VALVE 2000 CARBURETTOR 44 mm	€14.20
9	2330670	VALVE SEAL reinforced inlet/black	On request
10	2231640	VALVE GUIDE SPIDER 1990-93 INJECTION	€11.68
11	2230300	EXHAUST VALVE 1600-1750 37 mm	€14.03
12	2230320	EXHAUST VALVE 2000 40 mm	€17.65

Nockenwelle/Camshaft 75 1.8 Turbo

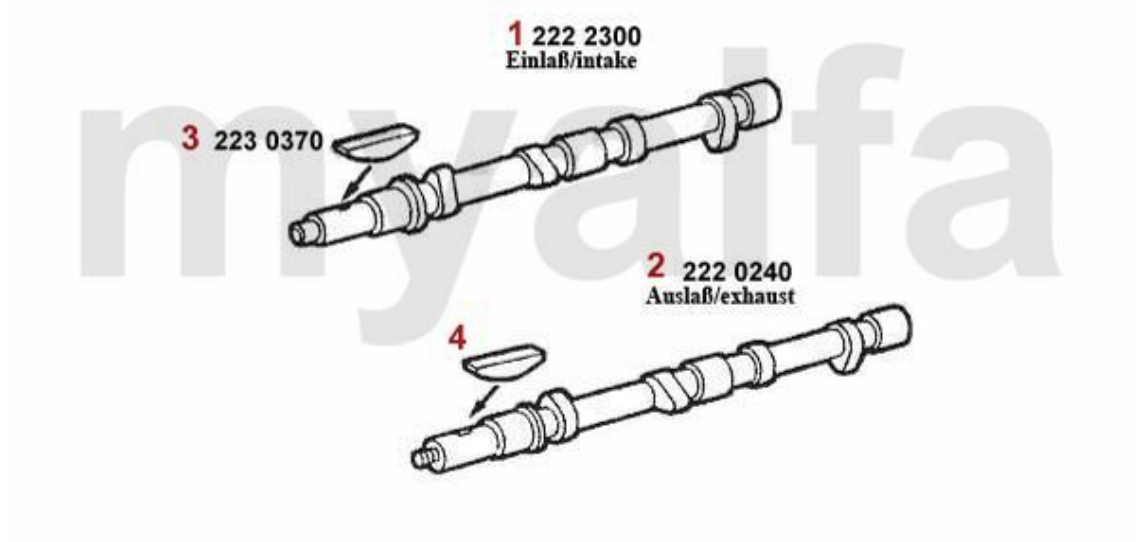

1	22223000	OE. 60523000 CAMSHAFT INTAKE 75 Turbo	On request
2	2220240	CAMSHAFT 1750/2000 CARBURETTOR / SPIDER 1990-93 INJECTION EXHAUST ONLY	On request
3	2230370	VALVE SEAT EXHAUST 1300 OVERSIZE 0.10	€15.04

Steuerkette 75 1.8 Turbo

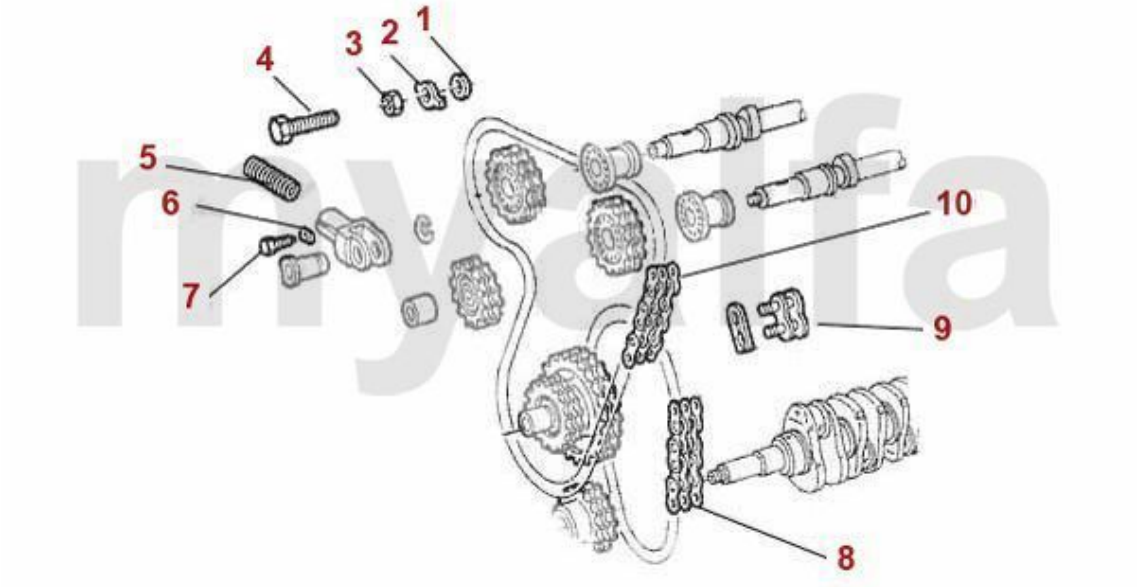

1	2421220	WASHER TIMING CHAIN SPROCKET	On request
2	2281230	TAB WASHER CAMSHAFT	€2.10
3	2421210	NUT TIMING CHAIN SPROCKET	€1.85
4	2280980	SAFETY SCREW CAMSHAFT	€2.94
5	2421200	CHAIN TENSIONER SPRING	€6.22
6	2421000	CHAIN TENSIONER LOCKING BLOCK	€4.62
7	2421010	CHAIN TENSIONER SCREW	€5.80
8	2410470R	TIMING CHAIN 1300 -2000 SHORT IWIS RACING	€62.10
8	2410470	BOTTOM TIMING CHAIN 1300-2000 WITHOUT LINK	€23.11
8	2410470I	TIMING CHAIN IWIS 1300-2000 SHORT ENDLESS	€49.58
9	2410480	TIMING CHAIN LINK	€6.30
10	2410460R	TIMING CHAIN 1750/2000 IWIS RACING	€88.15
10	2410460I	TIMING CHAIN IWIS 1750-2000 WITH LINK	€83.95
10	2410460	TOP TIMING CHAIN 1750-2000 WITH LINK	€35.80

Ventiltrieb 75 1.8 Turbo

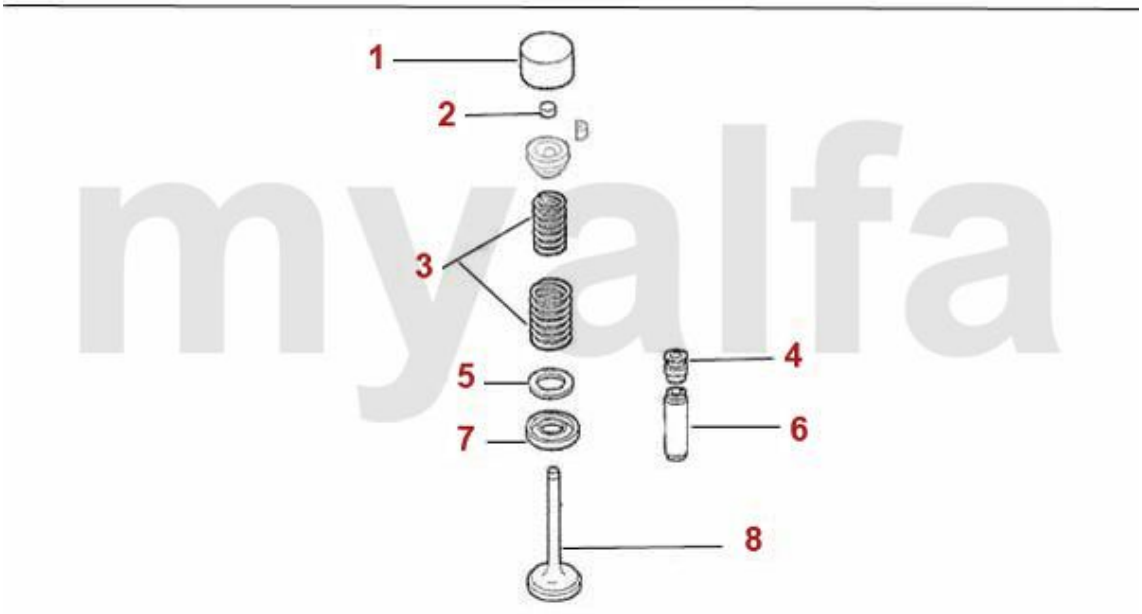

1	2240680	CAM FOLLOWER OE-QUALITY 101/105/115/116/75/155/164	€16.39
1	2240710	CAM FOLLOWER DLC RACING MADE IN ITALY 101/105/115/116/75/164	€36.89
2	2431140	SET VALVE SHIMS 200 PIECES 2,525 - 3,5 mm, DIAMETER 9mm	€469.75
2	2430840	SET VALVE SHIMS 205 PIECES 1,5 - 2,5 mm, DIAMETER 9mm	€469.75
2	2430430	VALVE SHIM 9MM PLEASE SUBMIT THE SIZE YOU NEED	€10.42
3	2232740	SET VALVE SPRINGS 16 PIECES	€75.55
4	2332550	VALVE SEAL REINZ	€4.12
5	2232950	SHIM VALVE CUP / SPRING	€2.98
6	2231650	VALVE GUIDE EXHAUST 75 1.8 TURBO	€12.18
7	2232920	VALVE SPRING CUP	On request
8	22334239	OE. 60534239 VALVE EXHAUST 75	On request
8	22334237	OE. 60534237 VALVE INTAKE 75	On request

Nockenwelle/Camshaft 75 2.0 TS

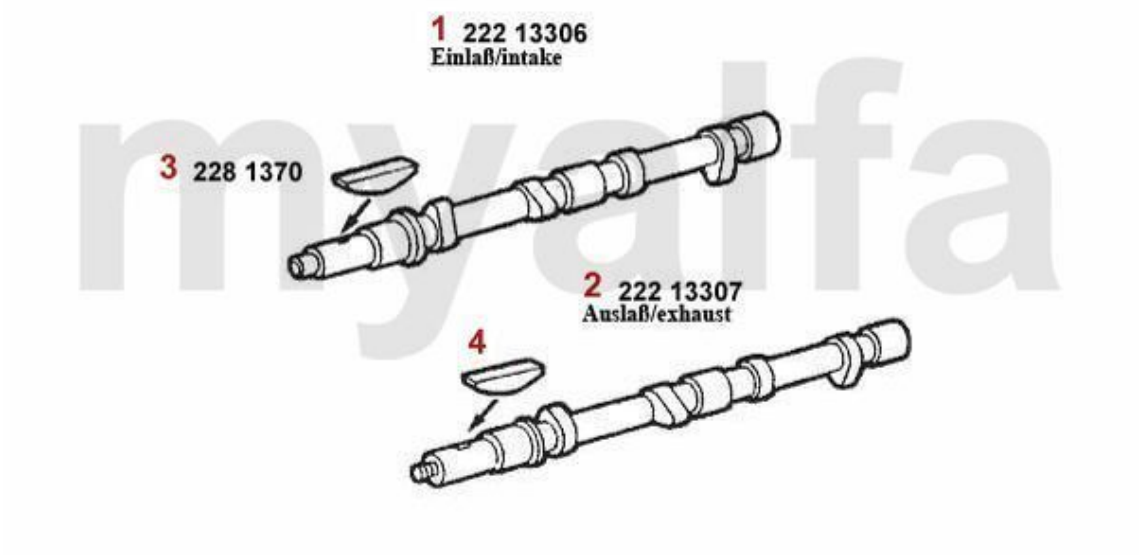

1	22213306	Nockenwelle (Einlass) 75,164 Bj. >92 2.0 TS	€478.91
2	22213307	Camshaft exhaust side 75,164 2.0 TS OE.60513307	On request
3	2281370	WEDGE CAMSHAFT	€11.34

Steuerkette/Timing Chain 75 2.0 TS

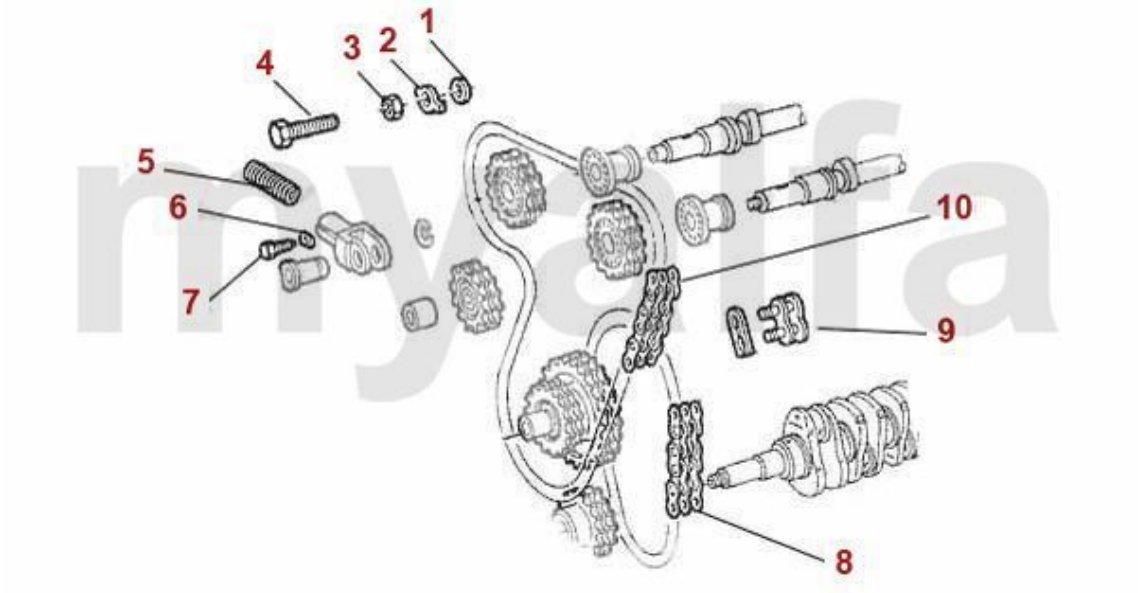

1	2421220	WASHER TIMING CHAIN SPROCKET	On request
2	2281230	TAB WASHER CAMSHAFT	€2.10
3	2421210	NUT TIMING CHAIN SPROCKET	€1.85
4	2280980	SAFETY SCREW CAMSHAFT	€2.94
5	24113313	OE. 60513313 Spring	€4.54
6	2421000	CHAIN TENSIONER LOCKING BLOCK	€4.62
7	2421010	CHAIN TENSIONER SCREW	€5.80
8	2410470R	TIMING CHAIN 1300 -2000 SHORT IWIS RACING	€62.10
8	2410470	BOTTOM TIMING CHAIN 1300-2000 WITHOUT LINK	€23.11
8	2410470I	TIMING CHAIN IWIS 1300-2000 SHORT ENDLESS	€49.58
9	2410480	TIMING CHAIN LINK	€6.30
10	24113301	OE. 60513301 TIMING CHAIN TS	€75.55

Ventiltrieb/Valve Train 75 2.0 TS

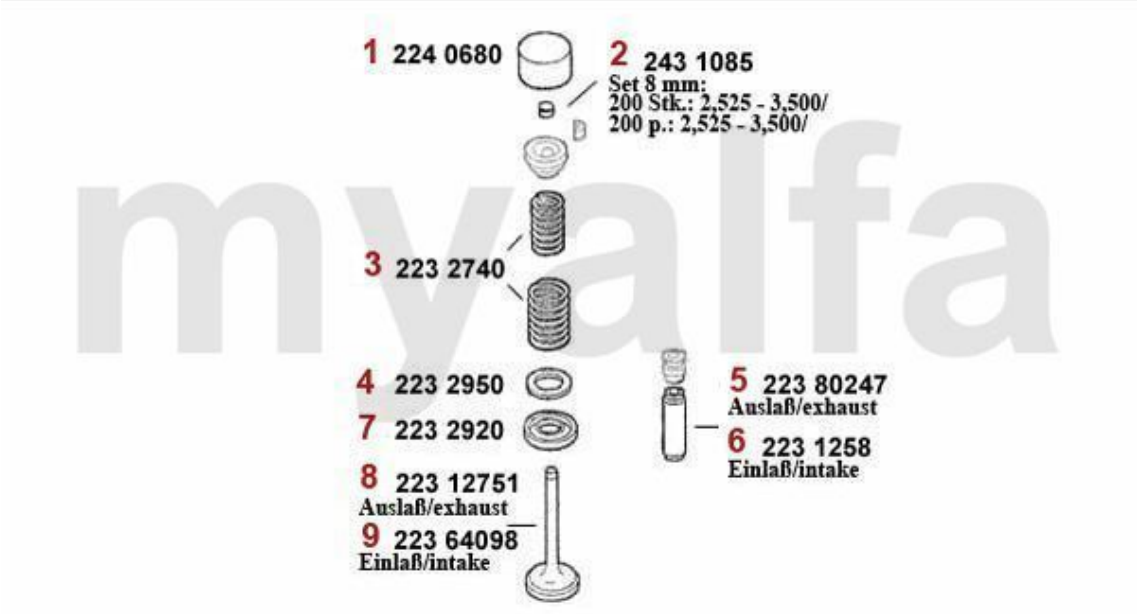

1	2240680	CAM FOLLOWER OE-QUALITY 101/105/115/116/75/155/164	€16.39
1	2240710	CAM FOLLOWER DLC RACING MADE IN ITALY 101/105/115/116/75/164	€36.89
2	2431083	VALVE TAPPET SET 8 mm 1.500 - 2.500, 205 PIECES	€491.60
2	2431085	VALVE TAPPET SET 8mm 2.525-3.500 200 pieces	€491.60
3	2232740	SET VALVE SPRINGS 16 PIECES	€75.55
4	2232950	SHIM VALVE CUP / SPRING	€2.98
5	22380247	OE. 60580247 VALVE GUIDE EXHAUST TS 8V	€12.52
6	2231258	OE. 60701258 VALVE GUIDE INTAKE 75,164/Super 2.0 TS	€11.68
7	2232920	VALVE SPRING CUP	On request
8	22312751	OE. 60512751 Valve Exhaust TS 8V	€49.58
9	22364098	OE. 60564098 Valve Intake TS 8V	€29.33

Nockenwelle/Camshaft 75 2.5/3.0 V6

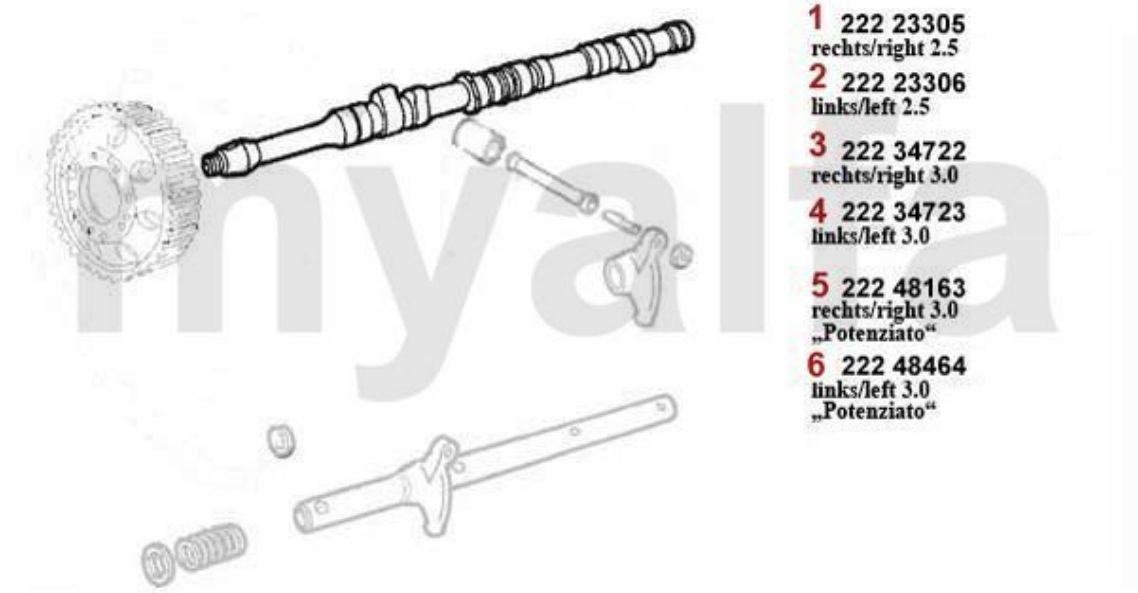

1	22223305	OE. 60523305 CAMSHAFT	€642.86
2	22223306	LEFT CAM SHAFT 75,90 2.5 V6, GTV6	On request
3	22234722	Nockenwelle rechts 75,164 3.0 V6 (A utomatik)	On request
4	22234723	Nockenwelle links 75 3.0 V6	€319.33
5	22248163	CAMSHAFT RIGHT 75 (potenziato),164 QV >1992, RZ,SZ 3.0 V6	On request
6	22248164	CAMSHAFT LEFT 75 (Potenziato),164 QV >1992, RZ,SZ 3.0 V6	On request

Ventiltrieb/Valve Train 75 2.5/3.0 V6

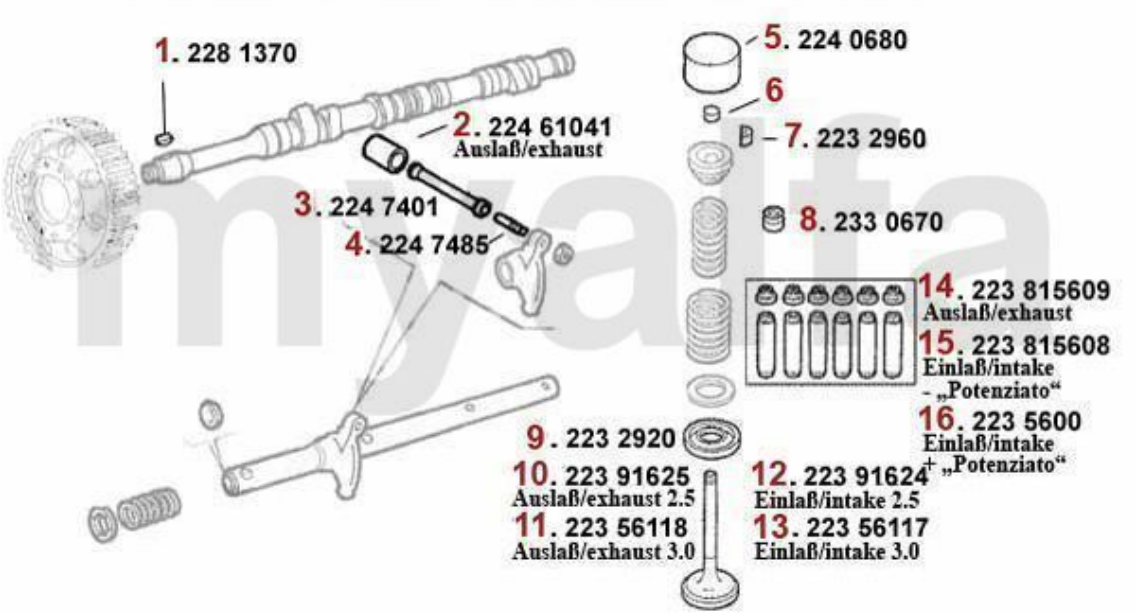

1	2281370	WEDGE CAMSHAFT	€11.34
2	22461041	OE. 60561041 EXHAUST CAM FOLLOWER 6-CYL., 22mm DIAMETER	€22.27
3	2247401	PUSH ROD (EXHAUST-SIDE) 75 ,155 164,166,RZ,SZ,GTV/SPIDER (916),GTV/ 6	€116.81
4	2247485	OE. 60507485 ADJUSTING SCREW ROCKER ARM SHAFT, 75, 155, 164, 166, RZ, SZ, GTV/Spider (916), GTV6	€2.94
5	2240680	CAM FOLLOWER OE-QUALITY 101/105/115/116/75/155/164	€16.39
5	2240710	CAM FOLLOWER DLC RACING MADE IN ITALY 101/105/115/116/75/164	€36.89
6	2431140	SET VALVE SHIMS 200 PIECES 2,525 - 3,5 mm, DIAMETER 9mm	€469.75
6	2430840	SET VALVE SHIMS 205 PIECES 1,5 - 2,5 mm, DIAMETER 9mm	€469.75
6	2430430	VALVE SHIM 9MM PLEASE SUBMIT THE SIZE YOU NEED	€10.42
7	2232960	VALVE COTTER 9MM	€1.60
8	2330670	VALVE SEAL reinforced inlet/black	On request
9	2232920	VALVE SPRING CUP	On request
10	22391625	OE. 60810441 Valve-Exhaust 6-Cylinder 116	€30.25
11	22356118	OE. 60512984 EXHAUST VALVE	€29.33
12	22391624	OE. 60523548 Valve-Intake 6-Cylinder 116	€30.25
13	22356117	OE. 60512982 INTAKE VALVE	€41.09
14	22315609	OE. 60605721 EXHAUST VALVE GUIDE 6-CYLINDER 116, STEEL	€11.68
15	22315608	OE. 60737367 Valve Guide-Intake 6-Cylinder 116	€12.52
16	2235600	OE. 60605725 Valve Giude	€13.36

Zahnriemen/Timing Belt 75 2.5/3.0 V6



1	24194423	OE. 60562106 Timing Belt	€39.08
2	24208222	Belttensioner hydraulic 75, 155, RZ, SZ,164, GTV6	On request
3	27177065	OE. 60777065 GASKET SET FOR HYDRAULIC BELTSTRETCHER 6-CYL.	€32.77
4	24288421	ALTERING KIT TIMING BELT TENSIONER HYDRAULIC TO	€158.82

Nockenwelle/Camshaft 75 TD



1	*22233445*	*Nockenwelle Alfetta,75,90 2.0/2.4 T D*	*On request*

Ventiltrieb/Valve Train 75 TD

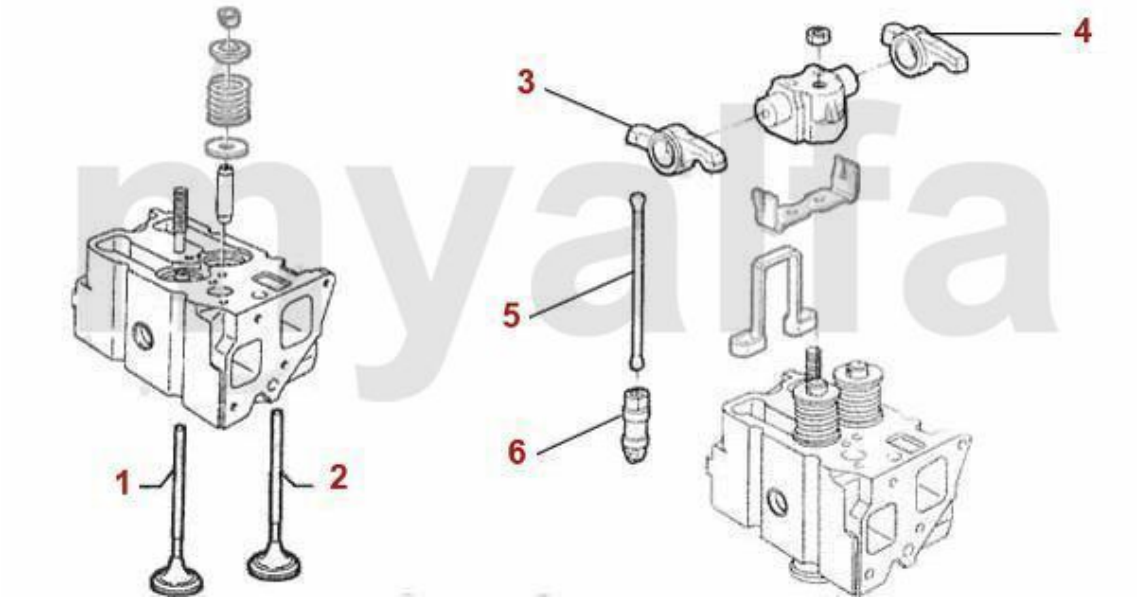

1	22391438	OE. 60540864 VALVE EXHAUST 1.8/2.5 TD	€68.57
2	22391437	OE. 60507189 VALVE INTAKE 1.8/2.5 TD	€31.85
3	22495513	OE. 60595513 ROCKER EXHAUST TD	€35.80
4	22495512	OE. 60595512 ROCKER INTAKE TD	€35.80
5	22496243	OE. 60594243 PUSH ROD 33 (905/7),75,155, 164/Super TD	€11.18
6	2247198	OE. 60507198 Tappet 33 (905/7),75,155, 164/Super TD	€24.20

Kolben/Pistons 75 4-Cyl.

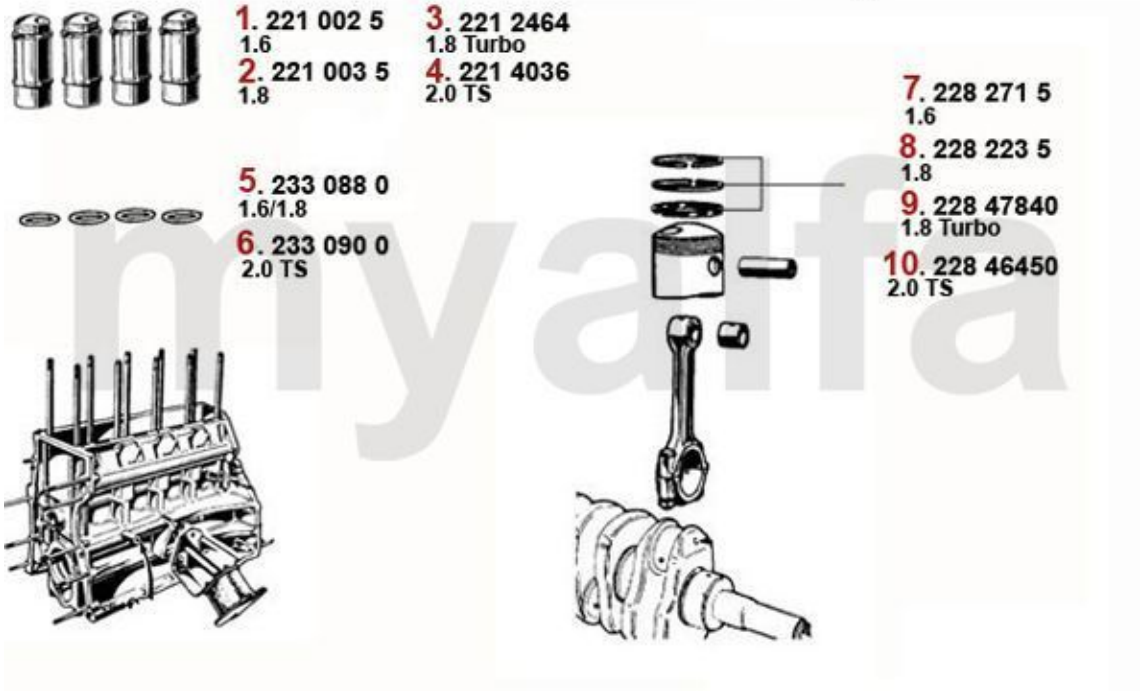

1	2212195	PISTON / LINER 1600	€116.81
2	2212205	PISTON / LINER 1750	€116.81
3	2212464	OE. 60778505 ASSEMBLY	On request
4	2214036	PISTON + LINER 75/164 2.0 TS 1988-92	€158.82
5	2330880	O-RING LINER 1600/1750	€2.94
6	2330900	O-RING LINER 2000	€2.31
7	2282715	SET PISTON RINGS 1600 1.5/1.75/3.5mm (FOR 1 PISTON)	On request
8	2282235	SET PISTON RINGS 1750 1.5/1.75/3.5mm (FOR 1 PISTON)	€32.69
9	22847840	OE. 60721009 PISTON RINGS SET V6, 156, 164, 166, gtv/spider (916), 75 1.8 Turbo (FOR 1 PIS	€57.98
10	22846450	OE. 60777532 PISTON RING SET TS, 8V	€35.80

Lager/Bearings 75 4-Cyl.

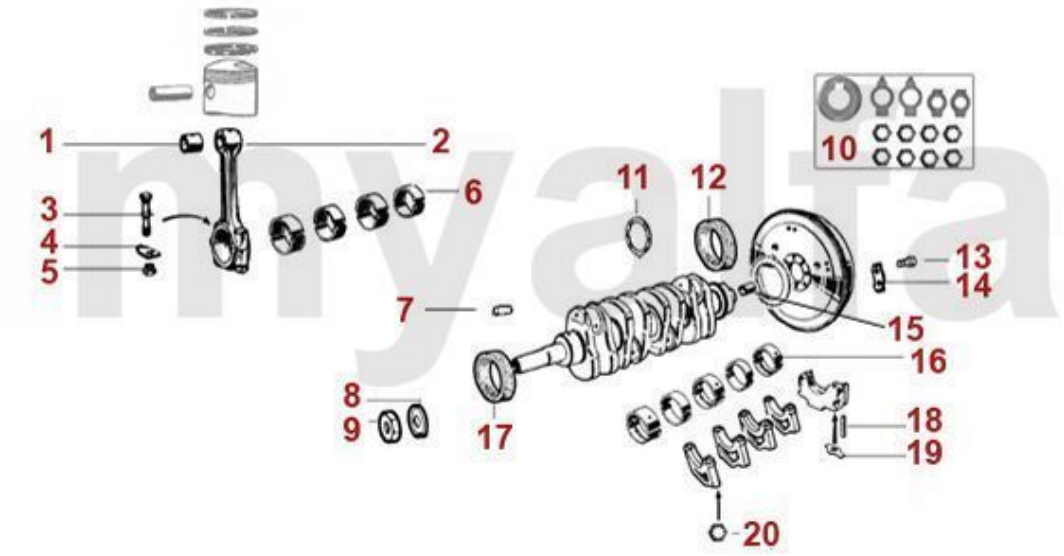

1	2261120	SMALL END BEARING 1600 - 2000	€17.56
2	2130130	CON ROD 1600 USED (PLEASE SUBMIT THE WEIGHT YOU NEED)	On request
2	2130140	CON ROD 1750 USED (PLEASE SUBMIT THE WEIGHT YOU NEED)	On request
2	2130150	CON ROD 2000 NEW	€108.40
3	2261050	CON ROD BOLT SET (2PC) 1750-2000 ALSO POSSIBLE FOR 1600	€16.72
4	2261390	TAB WASHER CON ROD NUT (SET 2 PCS) 1600-1750	€2.18
5	2261080	CON ROD NUT 1600-2000	€4.12
6	2260200	BIG END BEARINGS (Set) 1600-2000 1. OVERSIZE 0,10	€319.24
6	2260220	BIG END BEARINGS (Set) 1600-2000 2. OVERSIZE 0,20	€58.40
6	2260780	BIG END BEARINGS (Set) 1600-2000 3. OVERSIZE 0.30	€58.40
6	2260180	BIG END BEARINGS (Set) 1600-2000 STANDARD	€61.26
7	2280950	ALUMINIUM PLUG CRANKSHAFT (SET 6 PCS) 6 mm DIAMETER	€10.08
7	2280960	ALUMINIUM PLUG CRANKSHAFT (SET 6 PCS) 6,25 mm	€10.08
8	2280970	TAB WASHER CRANK PULLEY NUT	€4.37
9	2280940	CRANK PULLEY NUT 1963-89	€16.39
10	2282730	TAB WASHER SET 13 PIECES MAIN BEARING / CAMSHAFT / PULLEY	€18.07
11	2240810	SET THRUST WASHERS - 101/105/115/116/75/155/164 - STANDARD	€18.91
11	2240820	THRUST WASHER SET - 101/105/115/116/75/155/164 - 0.005	€23.95
11	2240830	THRUST WASHER SET - 101/105/115/116/75/155/164 - 0.010	€23.11
12	2330230	OIL SEAL CRANK SHAFT REAR 82/105/12 750/101/105/115/116 UP TO 1989, OEM QUALITY	€27.65
13	4211550	SCREW FLYWHEEL 6 HOLE	€4.16
14	4211500	TAB WASHER SCREW FLYWHEEL (SET 4 PCS) 8 HOLE	€8.32
15	2251100	CRANK SPIGOT BUSH 20 mm / 1750 ccm	€9.16
16	2250100	MAIN BEARINGS (Set) 1300-2000 - 1. OVERSIZE 0,10	€66.81
16	2250110	MAIN BEARINGS (Set) 1300-2000 2. OVERSIZE 0,20	€66.81
16	2250090	MAIN BEARINGS (Set) 1300-2000 STANDARD	€66.81
17	2330220	OIL SEAL CRANK SHAFT FRONT 35/50/10	€7.98
18	2331550	MAIN BEARING 'CIGARETTE' OIL SEAL	€3.32

19	*2251490*	*TAB WASHER 5th MAIN BEARING*	*€1.26*
20	*2282700*	*MAIN BEARING LOCKNUT*	*€1.60*

Kolben/Pistons 75 2.5/3.0 V6



1	2212255	PISTON/LINER 2.5 V6, 1980-97, 6, 75, 90, 155, 164, ALFETTA / GTV6	€149.16
2	2212475	OE. 60778673 PISTON/LINER 3.0 12V, QV DESIGN	€138.66
3	22846510	OE. 60735980 PISTON RING SET 116 6-Cyl. (FOR 1 PISTON)	€33.53
4	22846500	OE. 60777916 PISTON RING SET 3.0 V6 (FOR 1 PISTON) 1.5/1.5/3.5 ¥93	€33.53
5	22692138	OE. 60513381 CON BEARING SET STD 6-CYL.	€83.19
6	226138.1	OE. 60513381/2 ROD BEARING 1st OVERSIZE 6-Cyl.	€75.55
7	2257179	MAIN BEARING SET STD 6 CYL.	€83.95
8	2251791	OE.60568884 MAINBEARING SET 1st OVERSIZE 6-Cyl.	€82.35
9	22502203	SET THRUST WASHER STD V6 OE 60513374	On request
10	22502205	SET THRUST WASHER 0,005 V6 OE 60513374	On request

Filter 75 1.6/1.8/2.0/IE



1	291125	OE. 60507080/60808974 OILFILTER	€13.36
2	292151	OE. 60522418 AIR FILTER 75. 90. ALFETTA, GIULIETTA, GTV/4 (116), 2.0	€22.61
3	2920150	AIR FILTER SPIDER 1986-93 INJECTION	€26.81
4	29313	FUEL LINE FILTER (UNIVERSAL)	€6.64
5	2930140	FUEL FILTER SPIDER 2000 IE 1986-93	€23.53
6	29394	FUEL FILTER 75 2.0 TS LINE FILTER	€17.65

Filter 75 1.8 Turbo

Oelfilter/Oilfilter

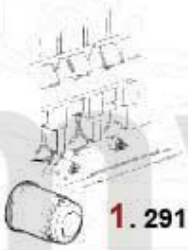

1. 291 125

Luftfilter/Airfilter

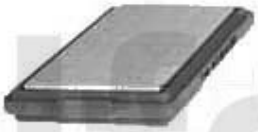

2. 292 0150

Kraftstofffilter/Fuelfilter



3. 2930140

Innenraumfilter/Indoorfilter

1	291125	OE. 60507080/60808974 OILFILTER	€13.36
2	2920150	AIR FILTER SPIDER 1986-93 INJECTION	€26.81
3	2930140	FUEL FILTER SPIDER 2000 IE 1986-93	€23.53

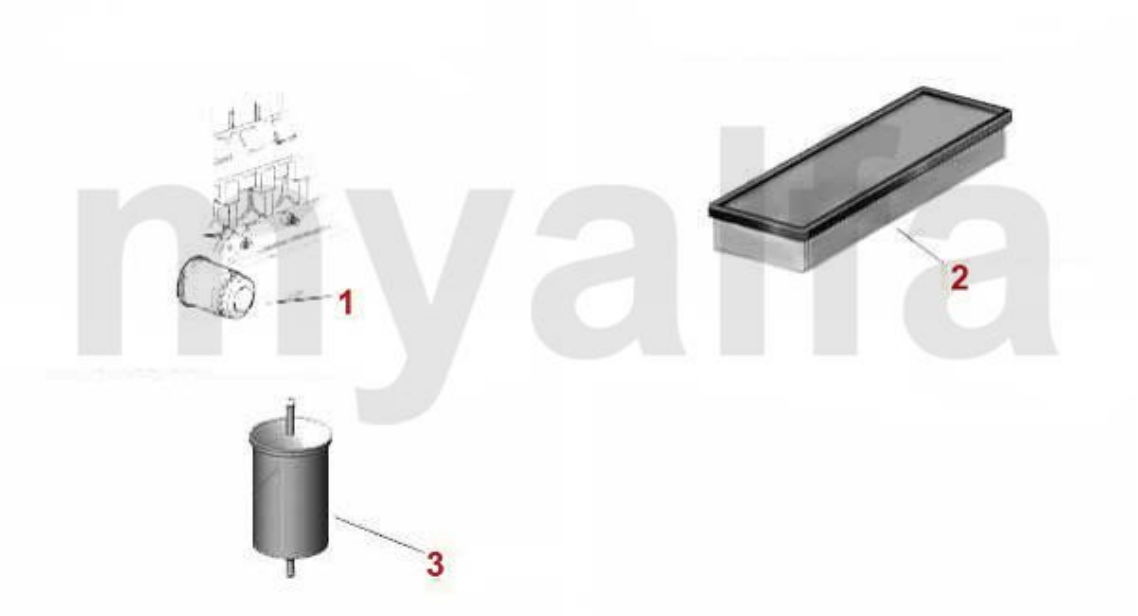

1	291125	OE. 60507080/60808974 OILFILTER	€13.36
2	2920150	AIR FILTER SPIDER 1986-93 INJECTION	€26.81
3	29394	FUEL FILTER 75 2.0 TS LINE FILTER	€17.65

Filter 75 2.5/3.0 V6



1	*291123*	*OE. 60553431, 60537470, 60533494, 60521128 OILFILTER*	*€10.84*
2	*292382*	*OE. 60522009 FILTER 75, 90, GTV6 (116), RZ, SZ 6-CYLINDER ANGULAR*	*€29.33*
3	*2930140*	*FUEL FILTER SPIDER 2000 IE 1986-93*	*€23.53*

Filter 75 2.0/2.4 TD



1	291406	OE. 71736171 OILFILTER	On request
2	292184	AIR FILTER 75,90,ALFETTA TD ANGULAR	On request
3	293234	FUEL FILTER 6, 33, 75, 90, 145/6, 155, 164, ALFETTA, GIULIETTA 1.8/1.9/2.0/2.4/2.5 TD	€16.05

Abgasanlage/Exhaust System 75 1.6 IE

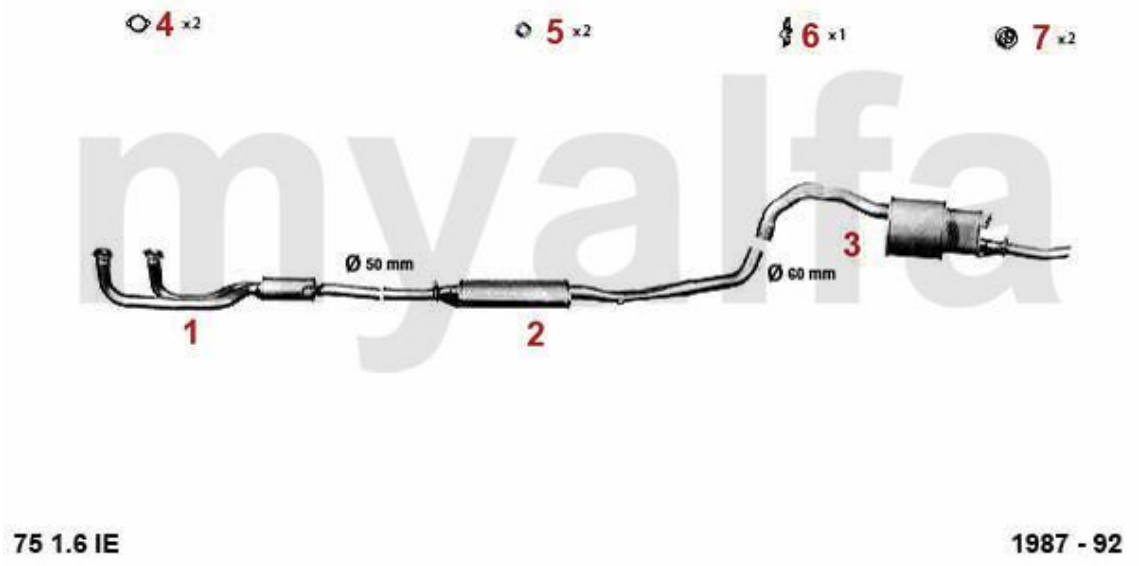

75 1.6 IE 1987 - 92

1	33205003	PRESILENCER 75 1.6 - 2.0 IE TS Bj. 87-92	€142.02
2	34105006	OE. 60530486 MIDDLE SILENCER 75 wo. CAT.	€167.65
3	35105007	OE. 60530487 REAR SILENCER 75	€133.61
4	38094413	OE. 60777697 GASKET	€5.80
5	38091011	OE. 60521386 RUBBER RING	€1.93
6	38091024	OE. 60521407 EXHAUST RUBBER MOUNT	€3.95
7	38091012	OE. 60573784 RUBBER RING	€2.10

Abgasanlage/Exhaust System 75 1.6 IE KAT

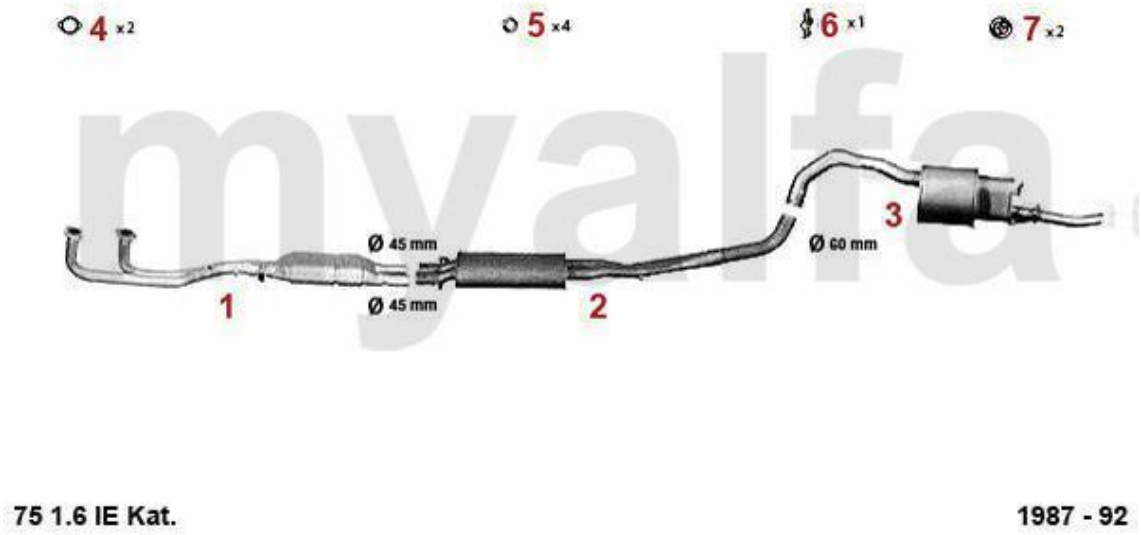

75 1.6 IE Kat. 1987 - 92

1	32114833	OE. 60564162 CATALYSATOR 75	On request
2	34104906	OE. 60528963 MIDDLE SILENCER 75 w. CAT.	€205.88
3	35105007	OE. 60530487 REAR SILENCER 75	€133.61
4	38094413	OE. 60777697 GASKET	€5.80
5	38091011	OE. 60521386 RUBBER RING	€1.93
6	38091024	OE. 60521407 EXHAUST RUBBER MOUNT	€3.95
7	38091012	OE. 60573784 RUBBER RING	€2.10

Abgasanlage/Exhaustsystem 75 1.8 Verg./Carb.

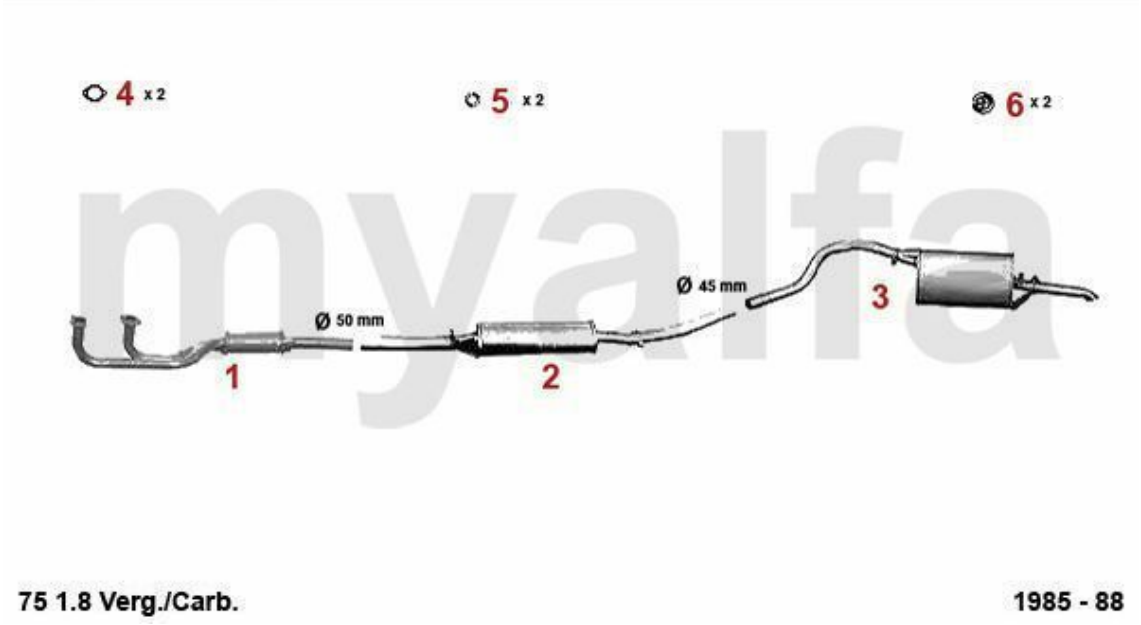

75 1.8 Verg./Carb. **1985 - 88**

1	*33201803*	*OE. 60730546 FRONT MUFFLER*	*€136.64*
2	*34101976*	*OE.60701995 MIDDLE SILENCER*	*€95.80*
3	*35104707*	*OE: 60526051*	*€113.45*
4	*38094413*	*OE. 60777697 GASKET*	*€5.80*
5	*38091011*	*OE. 60521386 RUBBER RING*	*€1.93*
6	*38091012*	*OE. 60573784 RUBBER RING*	*€2.10*

Abgasanlage/Exhaust System 75 1.8 IE

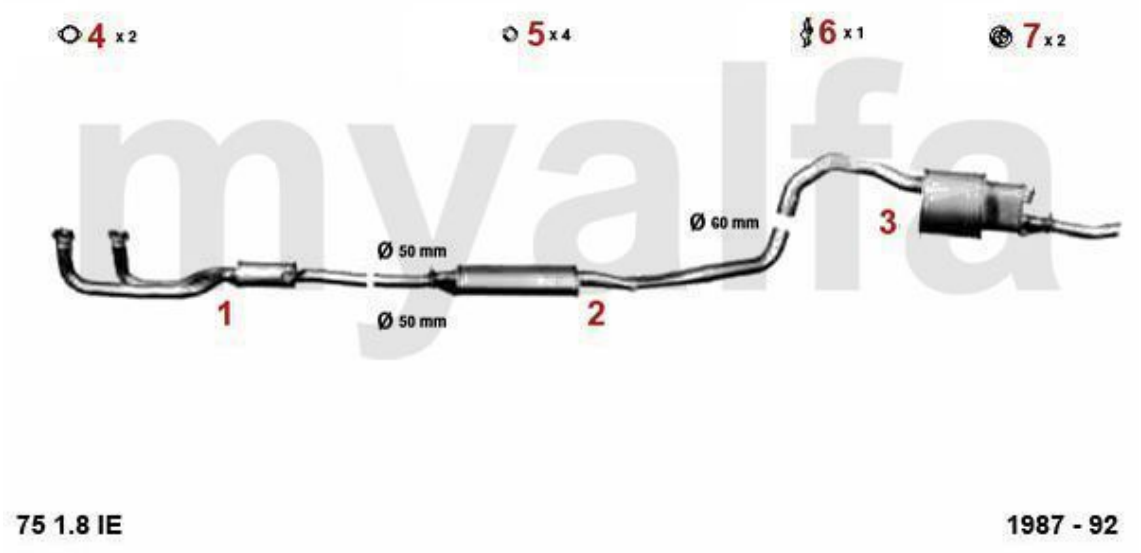

75 1.8 IE 1987 - 92

1	33205003	PRESILENCER 75 1.6 - 2.0 IE TS Bj. 87-92	€142.02
2	34105006	OE. 60530486 MIDDLE SILENCER 75 wo. CAT.	€167.65
3	35105007	OE. 60530487 REAR SILENCER 75	€133.61
4	38094413	OE. 60777697 GASKET	€5.80
5	38091011	OE. 60521386 RUBBER RING	€1.93
6	38091024	OE. 60521407 EXHAUST RUBBER MOUNT	€3.95

Abgasanlage/Exhaust System 75 1.8 IE KAT



75 1.8 IE Kat. 1987 - 92

1	32114833	OE. 60564162 CATALYSATOR 75	On request
2	34104906	OE. 60528963 MIDDLE SILENCER 75 w. CAT.	€205.88
3	35105007	OE. 60530487 REAR SILENCER 75	€133.61
4	38094413	OE. 60777697 GASKET	€5.80
5	38091011	OE. 60521386 RUBBER RING	€1.93
6	38091024	OE. 60521407 EXHAUST RUBBER MOUNT	€3.95

Abgasanlage/Exhaust System 75 1.8 Turbo

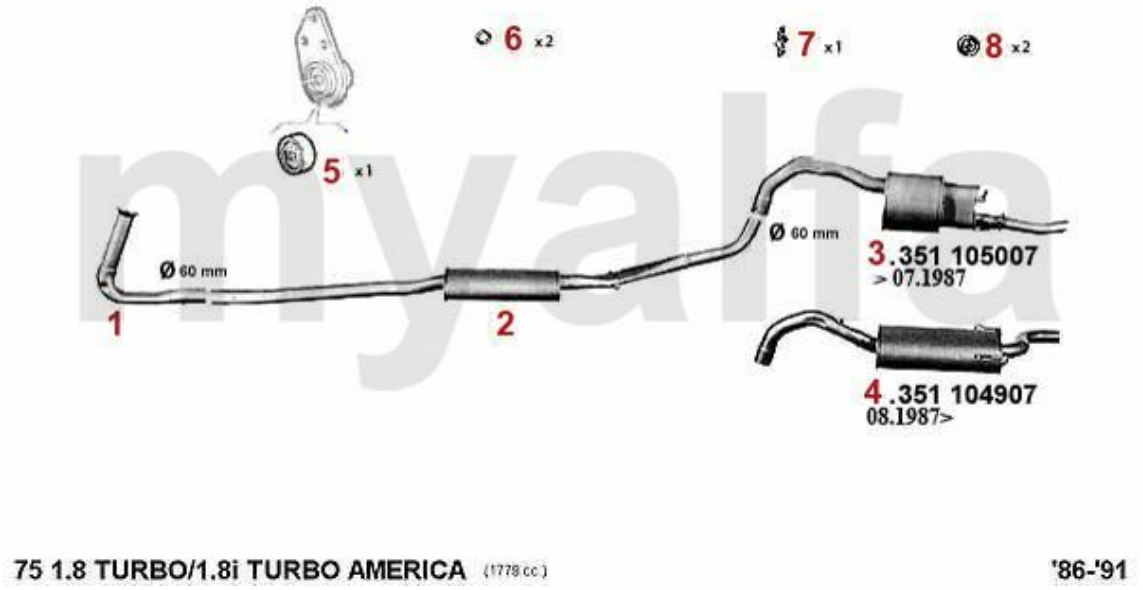

75 1.8 TURBO/1.8i TURBO AMERICA (1779 cc) '86-'91

1	33104301	OE. 60518331 FRONT PIPE	€29.24
2	34104306	OE. 60518330 MIDDLE SILENCER	€217.65
3	35105007	OE. 60530487 REAR SILENCER 75	€133.61
4	35104907	OE. 60528964 REAR SILENCER 75 1.8 TURBO, 2.5/3.0 V6	€167.23
5	3800280	GEARBOX EXHAUST HANGER BUSH	€7.98
6	38091011	OE. 60521386 RUBBER RING	€1.93
7	38091024	OE. 60521407 EXHAUST RUBBER MOUNT	€3.95
8	38091012	OE. 60573784 RUBBER RING	€2.10

Abgasanlage/Exhaust System 75 2.0 TS

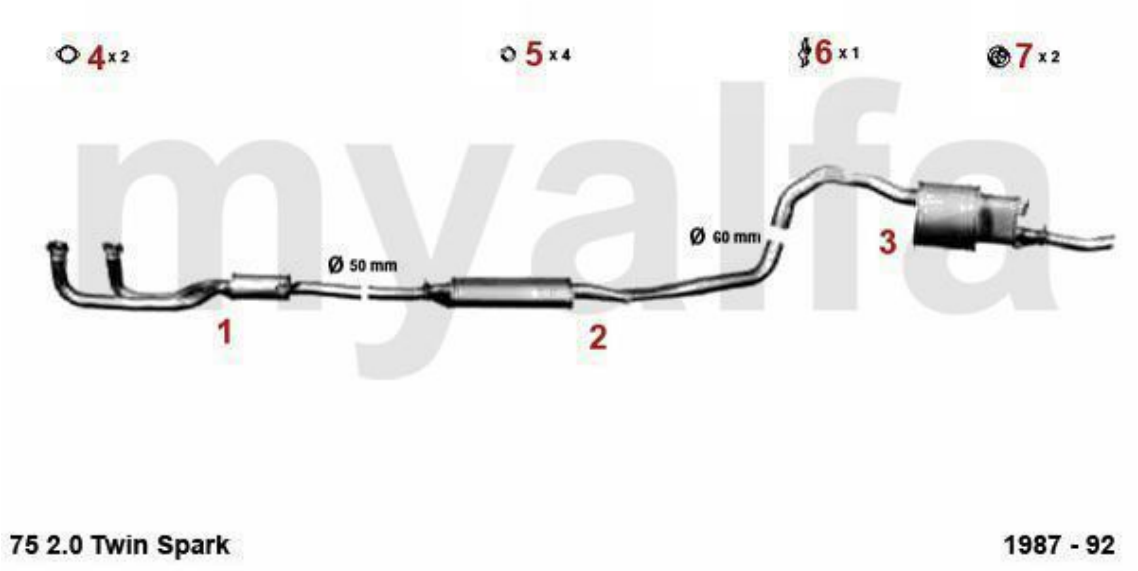

75 2.0 Twin Spark 1987 - 92

1	33205003	PRESILENCER 75 1.6 - 2.0 IE TS Bj. 87-92	€142.02
2	34105006	OE. 60530486 MIDDLE SILENCER 75 wo. CAT.	€167.65
3	35105007	OE. 60530487 REAR SILENCER 75	€133.61
4	38094413	OE. 60777697 GASKET	€5.80
5	38091011	OE. 60521386 RUBBER RING	€1.93
6	38091024	OE. 60521407 EXHAUST RUBBER MOUNT	€3.95
7	38091012	OE. 60573784 RUBBER RING	€2.10

Abgasanlage/Exhaust System 75 2.0 TS KAT

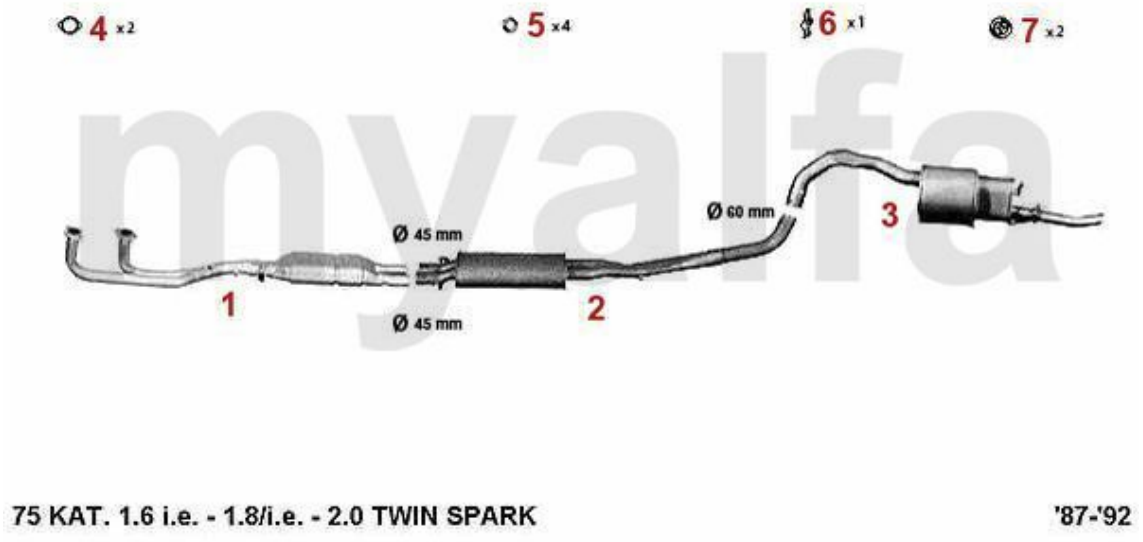

75 KAT. 1.6 i.e. - 1.8/i.e. - 2.0 TWIN SPARK '87-'92

1	32114833	OE. 60564162 CATALYSATOR 75	On request
2	34104906	OE. 60528963 MIDDLE SILENCER 75 w. CAT.	€205.88
3	35105007	OE. 60530487 REAR SILENCER 75	€133.61
4	38094413	OE. 60777697 GASKET	€5.80
5	38091011	OE. 60521386 RUBBER RING	€1.93
6	38091024	OE. 60521407 EXHAUST RUBBER MOUNT	€3.95
7	38091012	OE. 60573784 RUBBER RING	€2.10

Abgasanlage/Exhaust System 75 V6

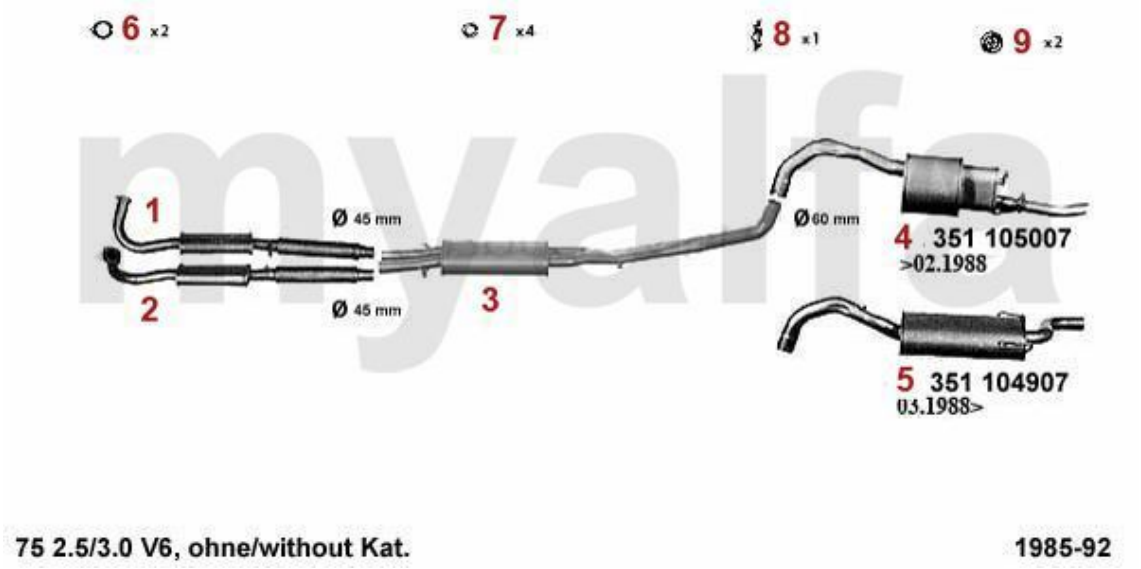

75 2.5/3.0 V6, ohne/without Kat. 1985-92

1	33205203	OE. 60522108 FRONT MUFFLER right	€164.62
2	33205213	OE. 60522109 FRONT MUFFLER left	€164.62
3	34104506	OE. 60530030 MIDDLE SILENCER	€220.92
4	35105007	OE. 60530487 REAR SILENCER 75	€133.61
5	35104907	OE. 60528964 REAR SILENCER 75 1.8 TURBO, 2.5/3.0 V6	€167.23
6	38094406	OE. 60522123 GASKET GTV6, 75/90 V6	€5.47
7	38091011	OE. 60521386 RUBBER RING	€1.93
8	38091024	OE. 60521407 EXHAUST RUBBER MOUNT	€3.95

Abgasanlage/Exhaust System 75 V6 KAT



75 2.5/3.0 V6, mit/with Kat. 1988-92

1	32104933	Katalysator 75 2.5/3.0 V6 bj. 88-92	On request
2	34104906	OE. 60528963 MIDDLE SILENCER 75 w. CAT.	€205.88
3	35104907	OE. 60528964 REAR SILENCER 75 1.8 TURBO, 2.5/3.0 V6	€167.23
4	38094406	OE. 60522123 GASKET GTV6, 75/90 V6	€5.47
5	38091011	OE. 60521386 RUBBER RING	€1.93
6	38091024	OE. 60521407 EXHAUST RUBBER MOUNT	€3.95
7	38091012	OE. 60573784 RUBBER RING	€2.10

Abgasanlage/Exhaust System 75 TD

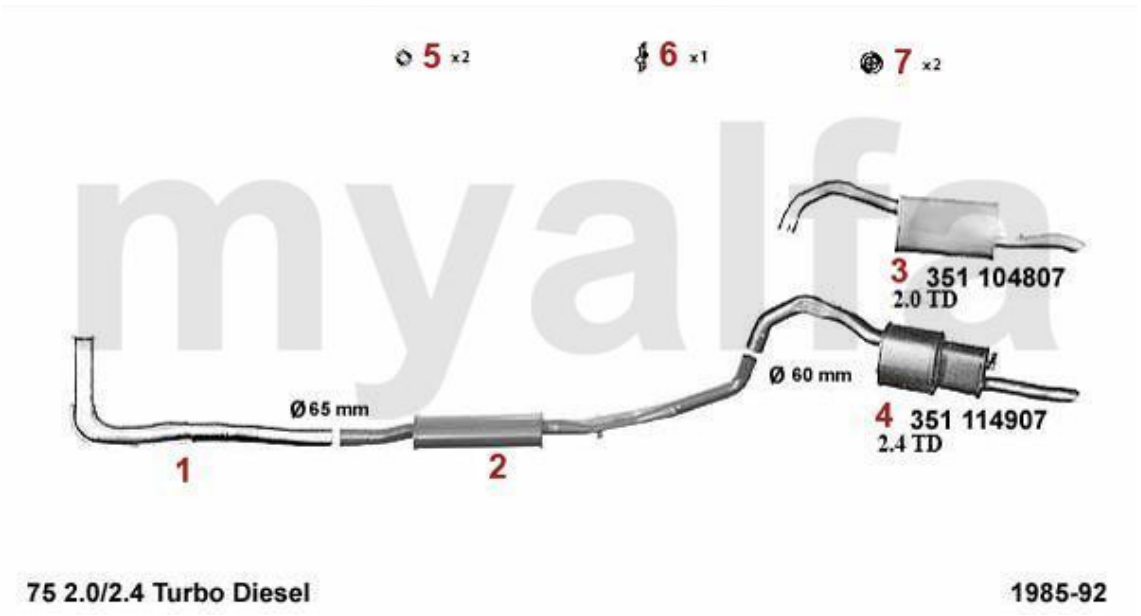

75 2.0/2.4 Turbo Diesel 1985-92

1	33104601	OE. 60533569 FRONT MUFFLER	€53.78
2	34104606	OE. 60533569 CENTER MUFFLER	€168.07
3	35104807	OE.60528438 REAR EXHAUST 75 2.0 TD	€99.16
4	35104907	OE. 60528964 REAR SILENCER 75 1.8 TURBO, 2.5/3.0 V6	€167.23
5	38091011	OE. 60521386 RUBBER RING	€1.93
6	38091024	OE. 60521407 EXHAUST RUBBER MOUNT	€3.95
7	38091012	OE. 60573784 RUBBER RING	€2.10

Lambda-Sonde/Lambda Probe 75 1.6 IE KAT.



1	*3700420*	*LAMBDA PROBE SPIDER 1990-93*	*€74.79*

Lambda-Sonde/Lambda Probe 75 1.8 IE KAT.



1	*3700420*	*LAMBDA PROBE SPIDER 1990-93*	*€74.79*

Lambda-Sonde/Lambda Probe 75 2.0 TS KAT.



1	*3700420*	*LAMBDA PROBE SPIDER 1990-93*	*€74.79*

Lambda-Sonde/Lambda Probe 75 2.5/3.0 V6 KAT.



1	*3700420*	*LAMBDA PROBE SPIDER 1990-93*	*€74.79*

Antriebswelle/Driveshaft 75 1.6/1.8/2.0/IE/TS

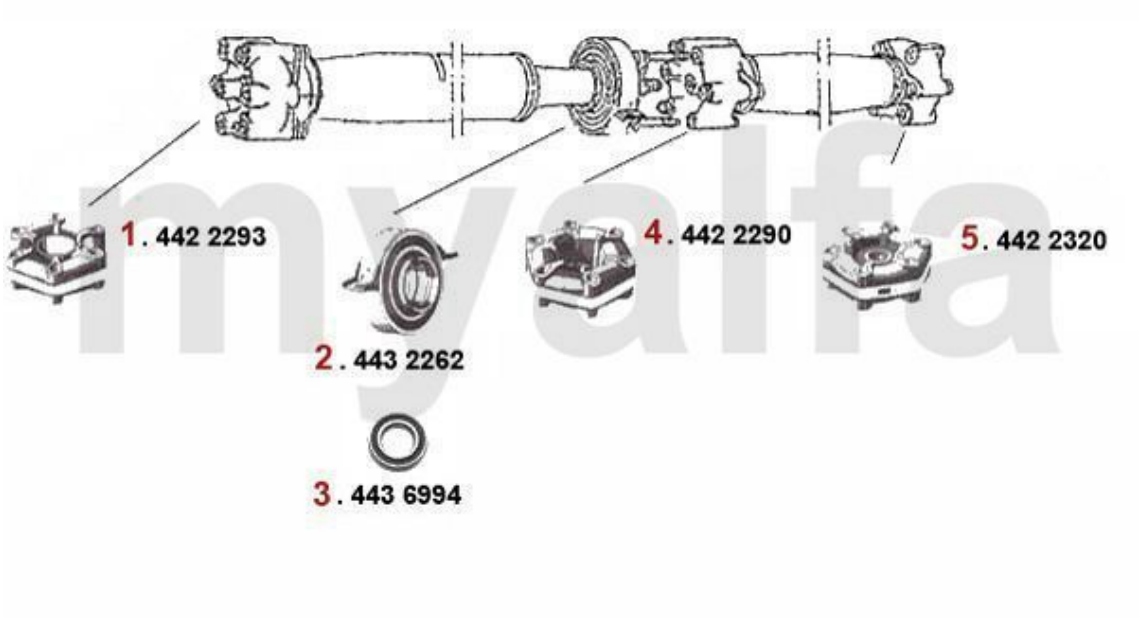

1	4422293	FRONT FLEX DISC 116 4-CYLINDERS OE.60521648	€71.43
2	4432262	OE. 60505302 PROP SHAFT CENTER SUPPORT 116 4-CYL.	€40.84
3	4436994	OE. 60505303 CENTER SHAFT BEARING ALFETTA, GTV (116), GIULIETTA,75 4 CYLINDER	€20.92
4	4422290	MIDDLE FLEX DISC ALFETTA, GIULIETTA 11.1976 > , 75,90	€117.56
5	4422320	OE.60521631 REAR FLEX DISC 116 4-CYLINDER	€74.79

Antriebswelle/Driveshaft 75 1.8 Turbo

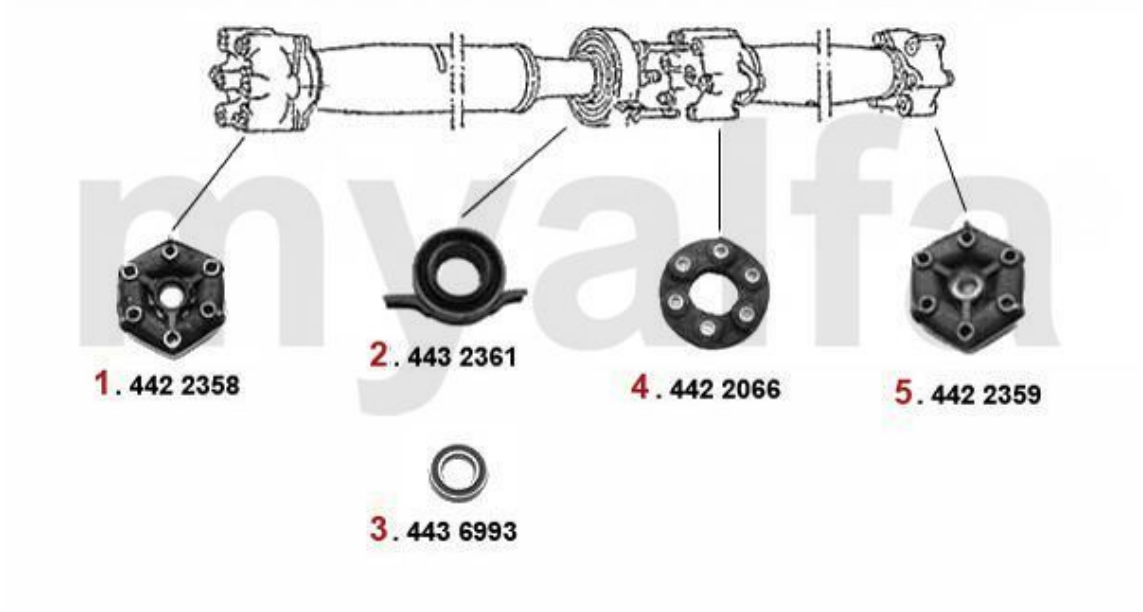

1	4422358	Front Flex disc GTV6, 75, 90 2500-3000 OE. 60518193	€167.23
2	4432361	OE. 60522599 DRIVE SHAFT SUPPORT 116 6-Cyl.	On request
3	4436993	OE. 60506993 BEARING FOR PROPSHAFT SUPPORT 116 6-CYL.	€20.92
4	4422066	OE. 60522066 MIDDLE FLEX DISC GTV6, 75 V6	€99.92
5	4422359	REAR FLEX DISC GTV6, 75, 90 2500-3000 OE. 60522592	€167.23

Antriebswelle/Driveshaft 75 2.5/3.0 V6



1	4422358	Front Flex disc GTV6, 75, 90 2500-3000 OE. 60518193	€167.23
2	4432361	OE. 60522599 DRIVE SHAFT SUPPORT 116 6-Cyl.	On request
3	4436993	OE. 60506993 BEARING FOR PROPSHAFT SUPPORT 116 6-CYL.	€20.92
4	4422066	OE. 60522066 MIDDLE FLEX DISC GTV6, 75 V6	€99.92
5	4422359	REAR FLEX DISC GTV6, 75, 90 2500-3000 OE. 60522592	€167.23

Antriebswelle/Driveshaft 75 2.0 TD

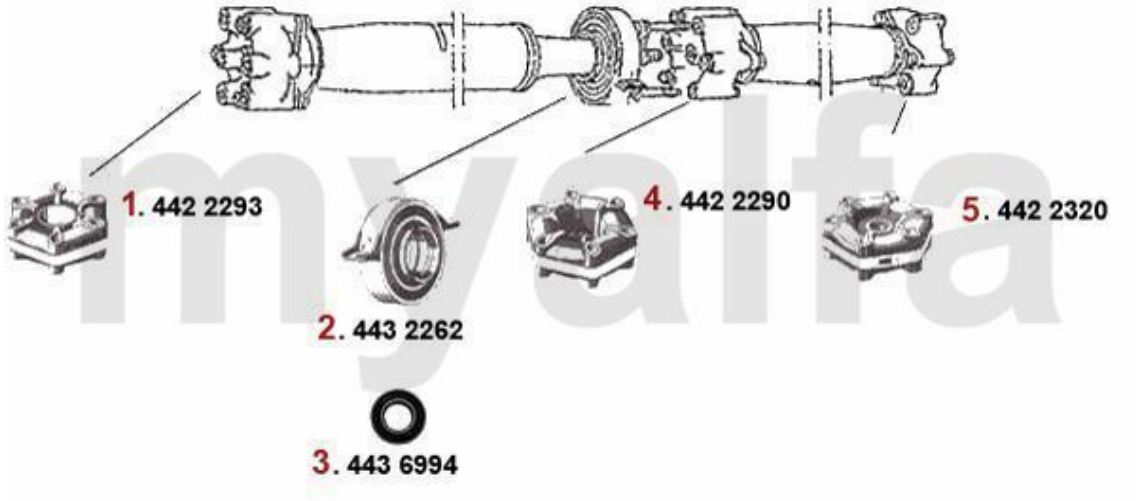

1	4422293	FRONT FLEX DISC 116 4-CYLINDERS OE.60521648	€71.43
2	4432262	OE. 60505302 PROP SHAFT CENTER SUPPORT 116 4-CYL.	€40.84
3	4436994	OE. 60505303 CENTER SHAFT BEARING ALFETTA, GTV (116), GIULIETTA,75 4 CYLINDER	€20.92
4	4422290	MIDDLE FLEX DISC ALFETTA, GIULIETTA 11.1976 > , 75,90	€117.56
5	4422320	OE.60521631 REAR FLEX DISC 116 4-CYLINDER	€74.79

Antriebswelle/Driveshaft 75 2.4 TD

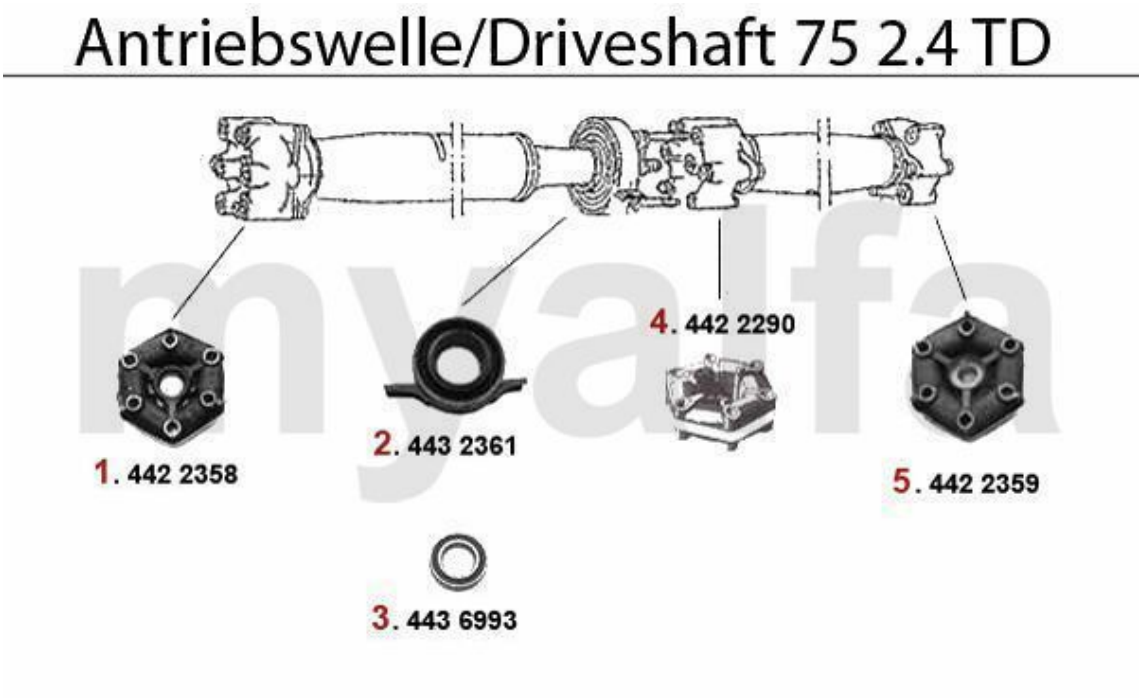

1	4422358	Front Flex disc GTV6, 75, 90 2500-3000 OE. 60518193	€167.23
2	4432361	OE. 60522599 DRIVE SHAFT SUPPORT 116 6-Cyl.	On request
3	4436993	OE. 60506993 BEARING FOR PROPSHAFT SUPPORT 116 6-CYL.	€20.92
4	4422290	MIDDLE FLEX DISC ALFETTA, GIULIETTA 11.1976 > , 75,90	€117.56
5	4422359	REAR FLEX DISC GTV6, 75, 90 2500-3000 OE. 60522592	€167.23

Seitenwelle/Side Shaft 75 1.6/1.8/2.0/IE/TS



1	*46220020*	*INNER/OUTER DRIVESHAFT JOINT 116 4-CYLINDER*	*€116.80*
2	*46326086*	*OE. 60729242 SIDE SHAFT BOOT SET inside/outside 116-4Cyl.*	*€25.00*

Seitenwelle/Side Shaft 75 1.8 Turbo



1	*46220021*	*OE. 60522104 REAR AXLE JOINT INNER/ OUTER 116 6-CYL.*	*€100.76*
2	*46326113*	*OE. 60728419 BOOT SET f. DRIVE SHAFT*	*€20.00*

Seitenwelle/Side Shaft 75 2.5/3.0 V6



1	*46220021*	*OE. 60522104 REAR AXLE JOINT INNER/ OUTER 116 6-CYL.*	*€100.76*
2	*46326113*	*OE. 60728419 BOOT SET f. DRIVE SHAFT*	*€20.00*

Seitenwelle/Side Shaft 75 2.0 TD



1	*46220020*	*INNER/OUTER DRIVESHAFT JOINT 116 4-CYLINDER*	*€116.80*
2	*46326086*	*OE. 60729242 SIDE SHAFT BOOT SET inside/outside 116-4Cyl.*	*€25.00*

Seitenwelle/Side Shaft 75 2.4 TD



1	*46220021*	*OE. 60522104 REAR AXLE JOINT INNER/ OUTER 116 6-CYL.*	*€100.76*
2	*46326113*	*OE. 60728419 BOOT SET f. DRIVE SHAFT*	*€20.00*

Getriebeaufhängung/Gear Mount 75 4-Cyl.

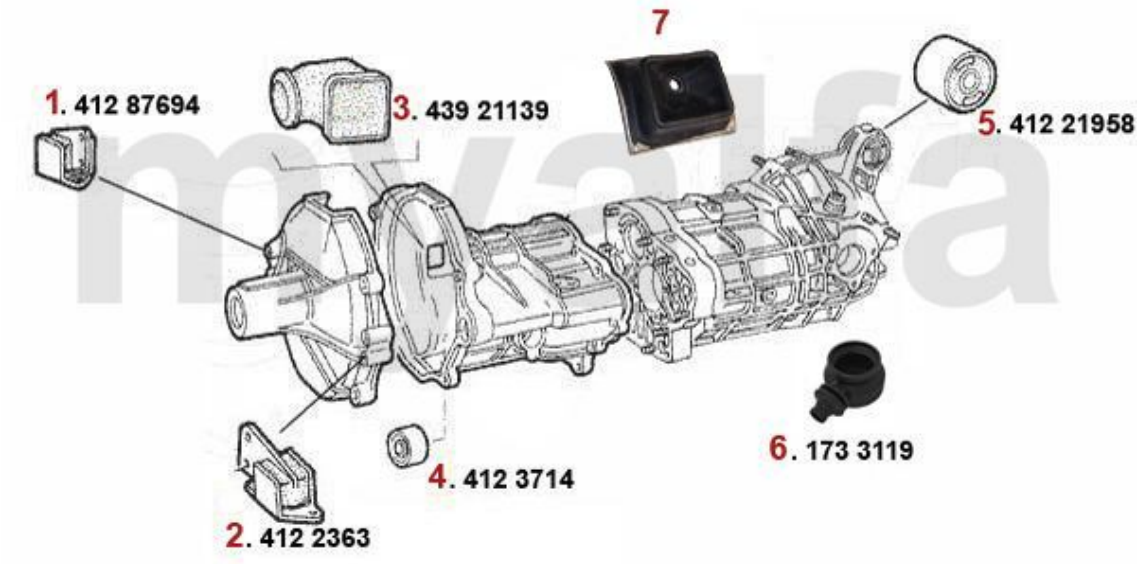

1	41287694	OE. 60521143 GEAR MOUNT 116 4-CYLINDER RIGHT	€29.33
2	4122363	OE. 60701586 GEAR MOUNT 116 4-CYLINDER LEFT	€29.33
3	43921139	OE. 60521139 GROMMET FOR RELEASE LEVER	€11.68
4	4123714	OE. 60523039 GEAR SHIFT BUSH AT TRANSMISSION	€23.11
5	41221958	OE. 60521958 TRANSMISSION MOUNT 75, 90, RZ SZ, ALFETTA, GIULIETTA, GTV (116)	€25.13
6	1733119	OE. 60523119 LOWER COWLING GEAR LEVER 75, 90 , RZ/SZ	€13.36
7	1732346	OE. 60701783 COVER f. GEARSTICK 116	€95.80

Getriebeaufhängung/Gear Mount 75 2.5/3.0 V6

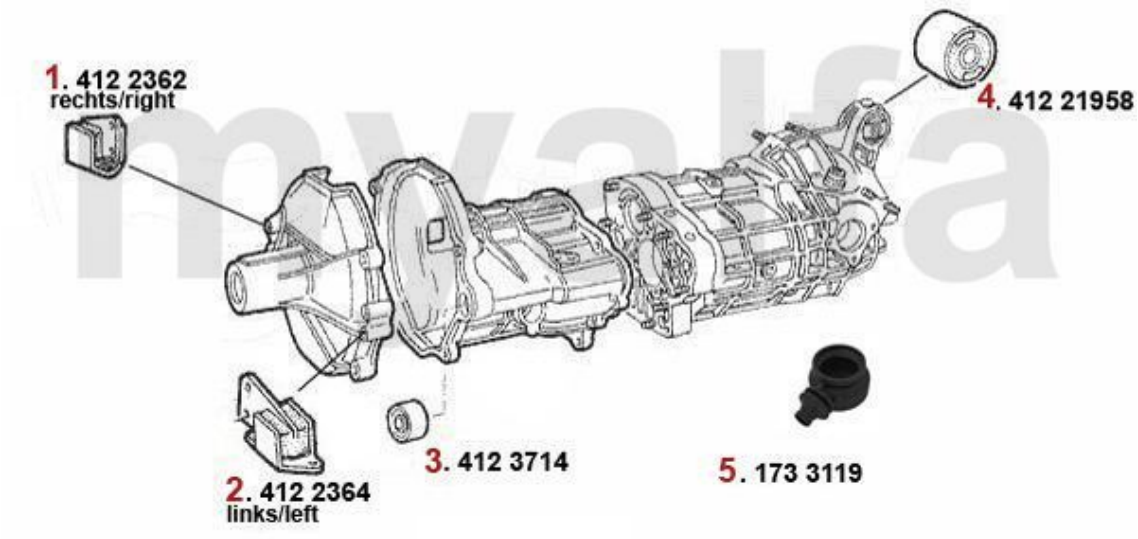

1	4122362	GEARBOX MOUNT RIGHT SIDE 75 1.8 Turbo/3.0 V6, Giulietta 2.0 Turbo RZ/SZ,GTV6	€32.52
2	4122364	GEARBOX MOUNT LEFT SIDE 1.8 Turbo/2.5/3.0 V6,Giulietta 2.0 Turbo RZ/SZ,GTV6	€32.52
3	4123714	OE. 60523039 GEAR SHIFT BUSH AT TRANSMISSION	€23.11
4	41221958	OE. 60521958 TRANSMISSION MOUNT 75, 90, RZ SZ, ALFETTA, GIULIETTA, GTV (116)	€25.13
5	1733119	OE. 60523119 LOWER COWLING GEAR LEVER 75, 90 , RZ/SZ	€13.36

Kupplungs-Kit/Clutch Set 75 1.6/IE

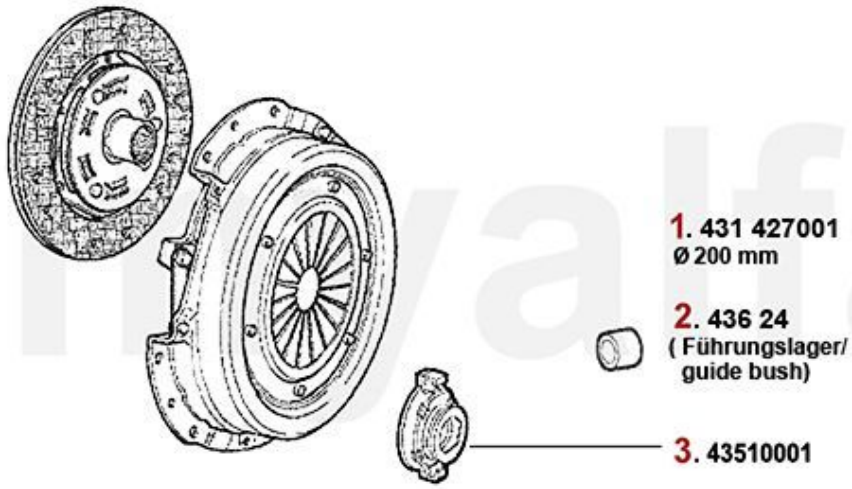

1	*43142701*	*CLUTCH KIT 116 1.3 - 1.6*	*€318.49*
2	*43624*	*OE. 60522024 NEEDLE BEARING*	*€41.93*
3	*43510001*	*RELEASE BEARING ALFETTA/ GIULIETTA, 75, 90, GTV 2.0 116*	*€57.98*

Kupplungs-Kit/Clutch Set 75 1.8/IE

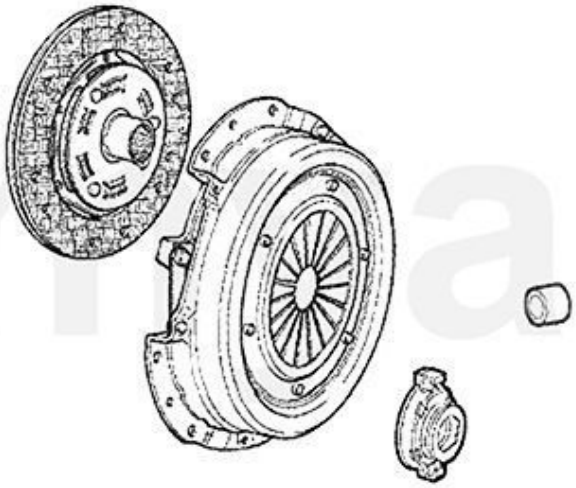

1	*4319003*	*CLUTCH KIT, ALFETTA, GUILIETTA,75, GTV (116), 1.6/1.8/2.0/IE/TS/TD 1974-1992*	*€319.24*
2	*43624*	*OE. 60522024 NEEDLE BEARING*	*€41.93*
3	*43510001*	*RELEASE BEARING ALFETTA/ GIULIETTA, 75, 90, GTV 2.0 116*	*€57.98*

Kupplungs-Kit/Clutch Set 75 1.8 Turbo



1	43151002	1 DISC CLUTCH KIT 116 6-CYL. SACHS	On request
1	43101300	REPLACEMENT FOR TWIN CLUTCH KIT WITH FLYWHEEL 75 V6, GTV6, ES 30 SZ / RZ	€1,845.29
2	43624	OE. 60522024 NEEDLE BEARING	€41.93

Kupplungs-Kit/Clutch Set 75 2.0 TS

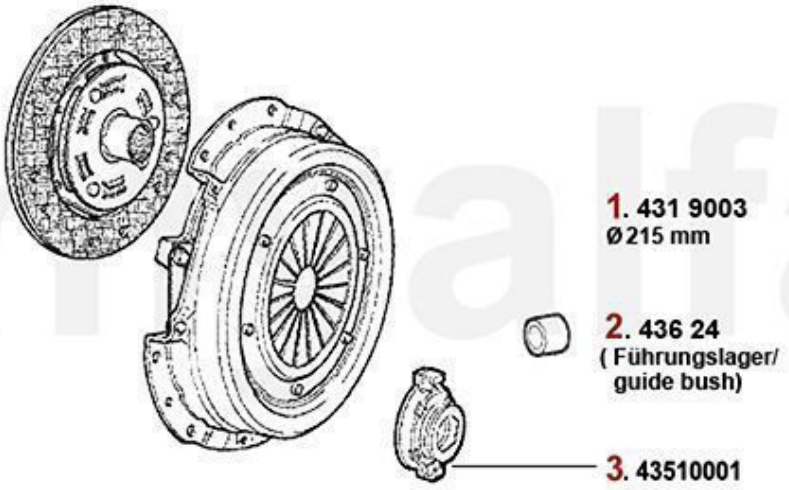

1	4319003	CLUTCH KIT, ALFETTA, GUILIETTA,75, GTV (116), 1.6/1.8/2.0/IE/TS/TD 1974-1992	€319.24
2	43624	OE. 60522024 NEEDLE BEARING	€41.93
3	43510001	RELEASE BEARING ALFETTA/ GIULIETTA, 75, 90, GTV 2.0 116	€57.98

Kupplungs-Kit/Clutch Set 75 2.5 V6

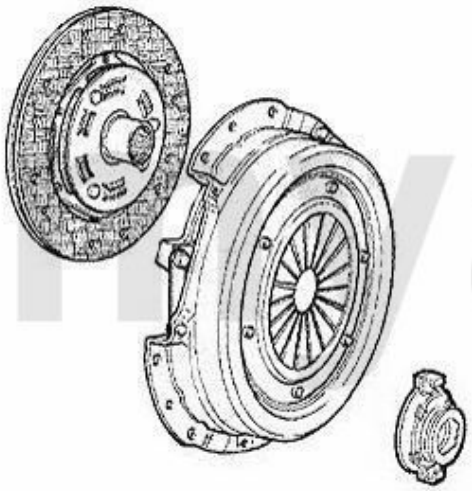

1. 431 451002
Ø 215 mm



2. 436 24
(Führungslager/
guide bush)

1	43151002	1 DISC CLUTCH KIT 116 6-CYL. SACHS	On request
1	43101300	REPLACEMENT FOR TWIN CLUTCH KIT WITH FLYWHEEL 75 V6, GTV6, ES 30 SZ / RZ	€1,845.29
2	43624	OE. 60522024 NEEDLE BEARING	€41.93

Kupplungs-Kit/Clutch Set 75 3.0 V6



1	43151002	1 DISC CLUTCH KIT 116 6-CYL. SACHS	On request
1	43101300	REPLACEMENT FOR TWIN CLUTCH KIT WITH FLYWHEEL 75 V6, GTV6, ES 30 SZ / RZ	€1,845.29
2	43624	OE. 60522024 NEEDLE BEARING	€41.93

Kupplungs-Kit/Clutch Set 75 2.0 TD



1	*4319003*	*CLUTCH KIT, ALFETTA, GUILIETTA,75, GTV (116), 1.6/1.8/2.0/IE/TS/TD 1974-1992*	*€319.24*
2	*43624*	*OE. 60522024 NEEDLE BEARING*	*€41.93*

Kupplungsbetätigung/Clutch Actuation 75 1.6/IE

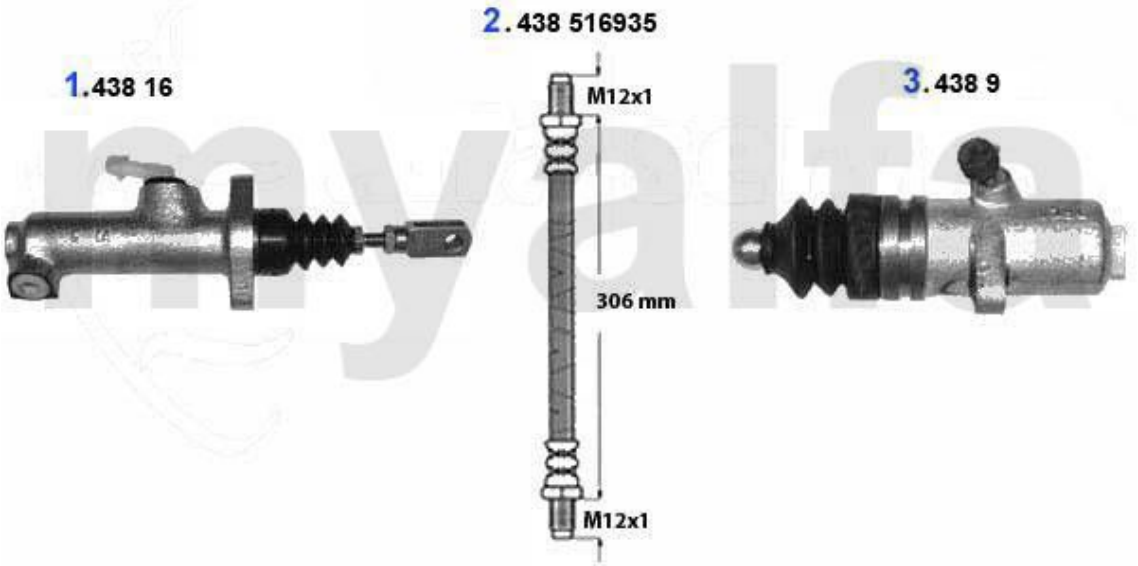

1	*43816*	*OE. 60518194 CLUTCH MASTER CYLINDER 116 1983>*	*€71.43*
2	*43816935*	*CLUTCH HOSE 116*	*€16.64*
3	*4389*	*OE. 60547341 CLUTCH SLEEVE CYL.*	*€54.62*

Kupplungsbetätigung/Clutch Actuation 75 1.8/IE

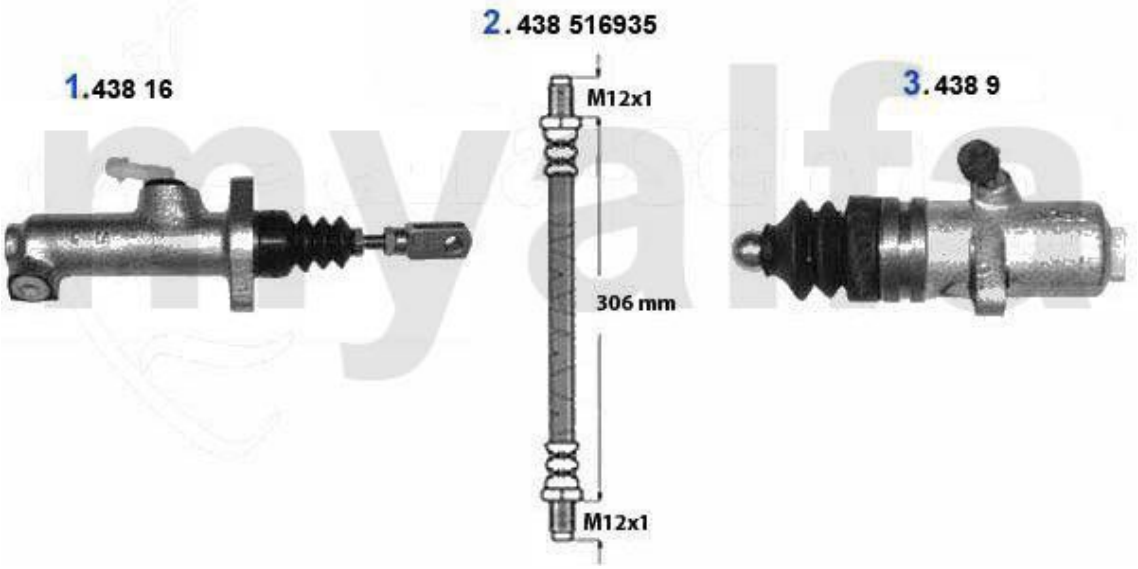

1	*43816*	*OE. 60518194 CLUTCH MASTER CYLINDER 116 1983>*	*€71.43*
2	*43816935*	*CLUTCH HOSE 116*	*€16.64*
3	*4389*	*OE. 60547341 CLUTCH SLEEVE CYL.*	*€54.62*

Kupplungsbetätigung/Clutch Actuation 75 1.8 Turbo



1	43816	OE. 60518194 CLUTCH MASTER CYLINDER 116 1983>	€71.43
2	43816935	CLUTCH HOSE 116	€16.64
3	4389	OE. 60547341 CLUTCH SLEEVE CYL.	€54.62
4	438161	OE. 60522023 CLUTCH SLAVE CYLINDER	€83.19

Kupplungsbetätigung/Clutch Actuation 75 2.0 TS

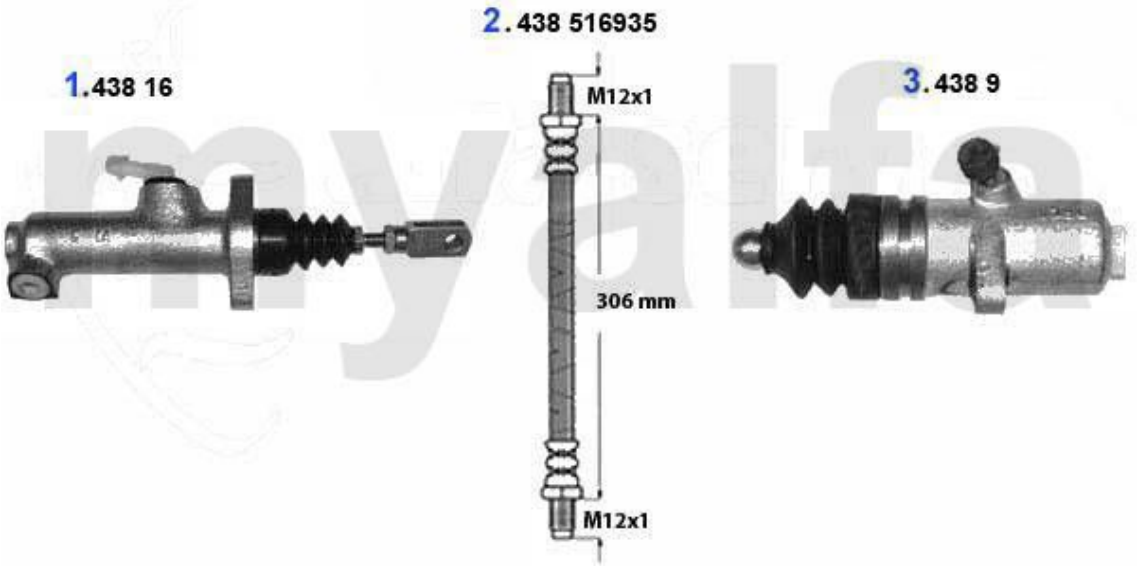

1	*43816*	*OE. 60518194 CLUTCH MASTER CYLINDER 116 1983>*	*€71.43*
2	*43816935*	*CLUTCH HOSE 116*	*€16.64*
3	*4389*	*OE. 60547341 CLUTCH SLEEVE CYL.*	*€54.62*

Kupplungsbetätigung/Clutch Actuation 75 2.5 V6



1	43816	OE. 60518194 CLUTCH MASTER CYLINDER 116 1983>	€71.43
2	43816935	CLUTCH HOSE 116	€16.64
3	4389	OE. 60547341 CLUTCH SLEEVE CYL.	€54.62
4	438161	OE. 60522023 CLUTCH SLAVE CYLINDER	€83.19

Kupplungsbetätigung/Clutch Actuation 75 3.0 V6



1	43816	OE. 60518194 CLUTCH MASTER CYLINDER 116 1983>	€71.43
2	43816935	CLUTCH HOSE 116	€16.64
3	4389	OE. 60547341 CLUTCH SLEEVE CYL.	€54.62
4	438161	OE. 60522023 CLUTCH SLAVE CYLINDER	€83.19

Kupplungsbetätigung/Clutch Actuation 75 TD



1	43816	OE. 60518194 CLUTCH MASTER CYLINDER 116 1983>	€71.43
2	43816935	CLUTCH HOSE 116	€16.64
2	4389	OE. 60547341 CLUTCH SLEEVE CYL.	€54.62
4	438161	OE. 60522023 CLUTCH SLAVE CYLINDER	€83.19

Federn/Springs 75

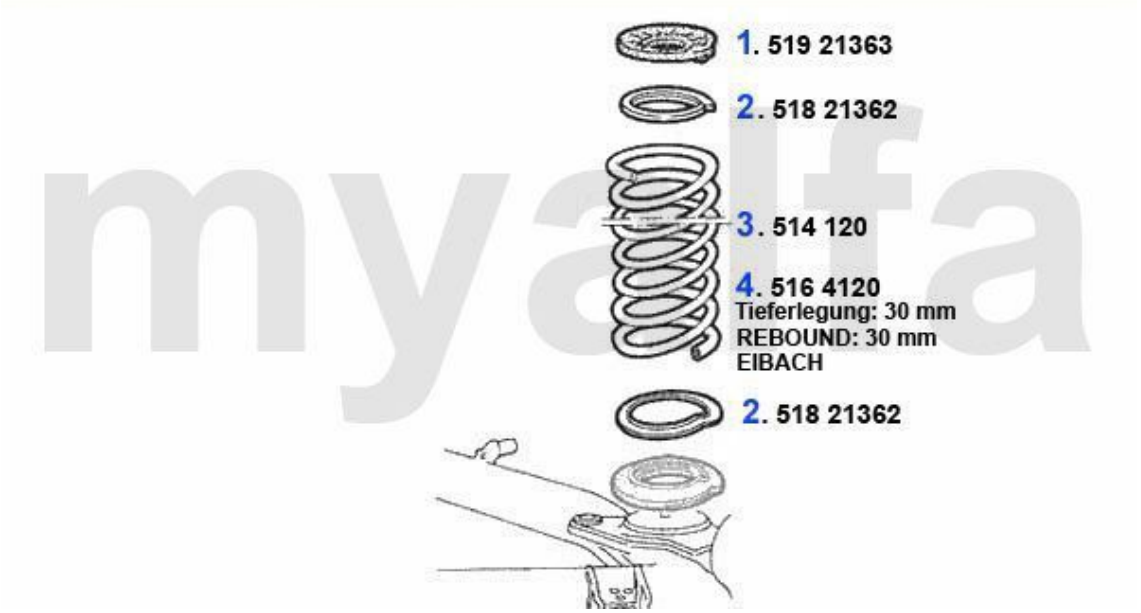

1	51921363	REAR SPRING UPPER RUBBER OE. 60521363	€15.97
2	51821362	METAL SEAT REAR SPRING LOWER / UPPER Alfetta / GT/V 4/6 / 75	€7.48
3	514120	OE. 60701617 Rear Spring Alfetta/GTV (116)	€80.59
4	5164120	REAR SPORT SPRINGS 30 MM LOWER 75, GTV (116)	€193.19

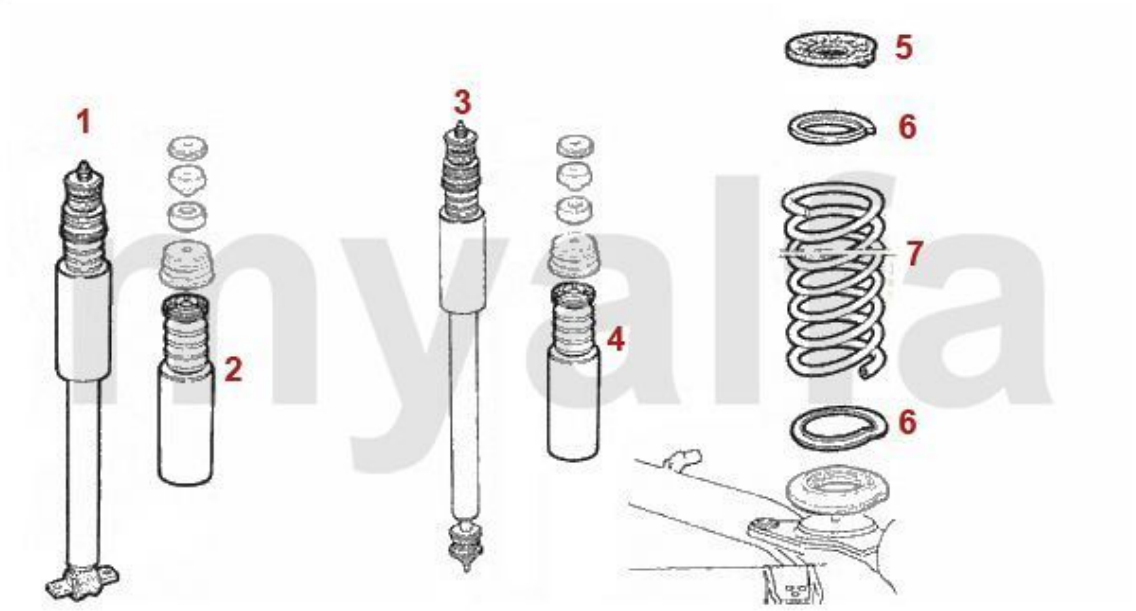

1	51170574	OE. 60530037 SHOCK ABSORBER	On request
1	51106621	OE. 60530037 SHOCK ABSORBER BILSTEIN B4	On request
1	5122570	KONI YELLOW FRONT 116 FROM 1985>	€125.97
1	51261175	SHOCKABSORBER BILSTEIN SPORT B6 75 FR. FA	€146.97
2	5199021	OE. 60523071 BOOT	On request
3	51170575	OE. 60533045 REAR SHOCK ABSORBER	€105.04
3	51106622	OE. 60533045 SHOCK ABSORBER BILSTEIN B4	On request
3	5122571	KONI YELLOW REAR AXLE 116 FROM 1985>	€104.96
3	51261176	SHOCKABSORBER BILSTEIN SPORT B6 REAR AXLE	€146.97
4	5199022	OE. 60533047 BOOT	On request
5	51921363	REAR SPRING UPPER RUBBER OE. 60521363	€15.97
6	51821362	METAL SEAT REAR SPRING LOWER / UPPER Alfetta / GT/V 4/6 / 75	€7.48
7	51448545	OE. 60533715 REAR SPRING 116	€80.59
7	5164120	REAR SPORT SPRINGS 30 MM LOWER 75, GTV (116)	€193.19
8	51921364	REAR SPRING LOWER RUBBER OE. 60701036	€15.97

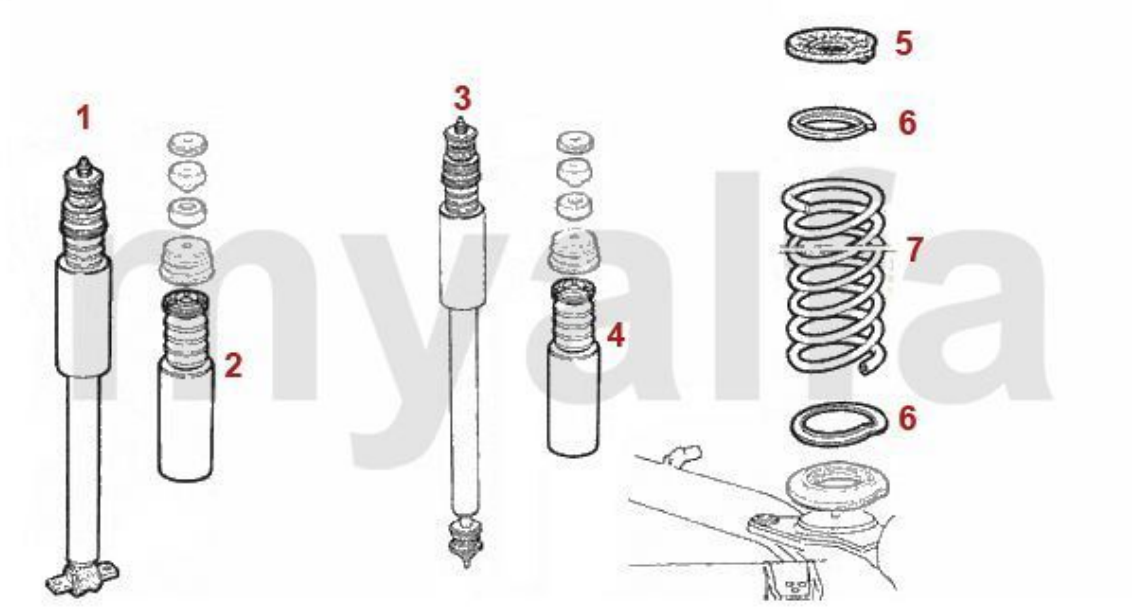

1	51170574	OE. 60530037 SHOCK ABSORBER	On request
1	51106621	OE. 60530037 SHOCK ABSORBER BILSTEIN B4	On request
1	5122570	KONI YELLOW FRONT 116 FROM 1985>	€125.97
1	51261175	SHOCKABSORBER BILSTEIN SPORT B6 75 FR. FA	€146.97
2	5199021	OE. 60523071 BOOT	On request
3	51170575	OE. 60533045 REAR SHOCK ABSORBER	€105.04
3	51106622	OE. 60533045 SHOCK ABSORBER BILSTEIN B4	On request
3	5122571	KONI YELLOW REAR AXLE 116 FROM 1985>	€104.96
3	51261176	SHOCKABSORBER BILSTEIN SPORT B6 REAR AXLE	€146.97
4	5199022	OE. 60533047 BOOT	On request
5	51921363	REAR SPRING UPPER RUBBER OE. 60521363	€15.97
6	51821362	METAL SEAT REAR SPRING LOWER / UPPER Alfetta / GT/V 4/6 / 75	€7.48
7	51448545	OE. 60533715 REAR SPRING 116	€80.59
7	5164120	REAR SPORT SPRINGS 30 MM LOWER 75, GTV (116)	€193.19
8	51921364	REAR SPRING LOWER RUBBER OE. 60701036	€15.97

Aufhängung/Attachment 75 vorne/front

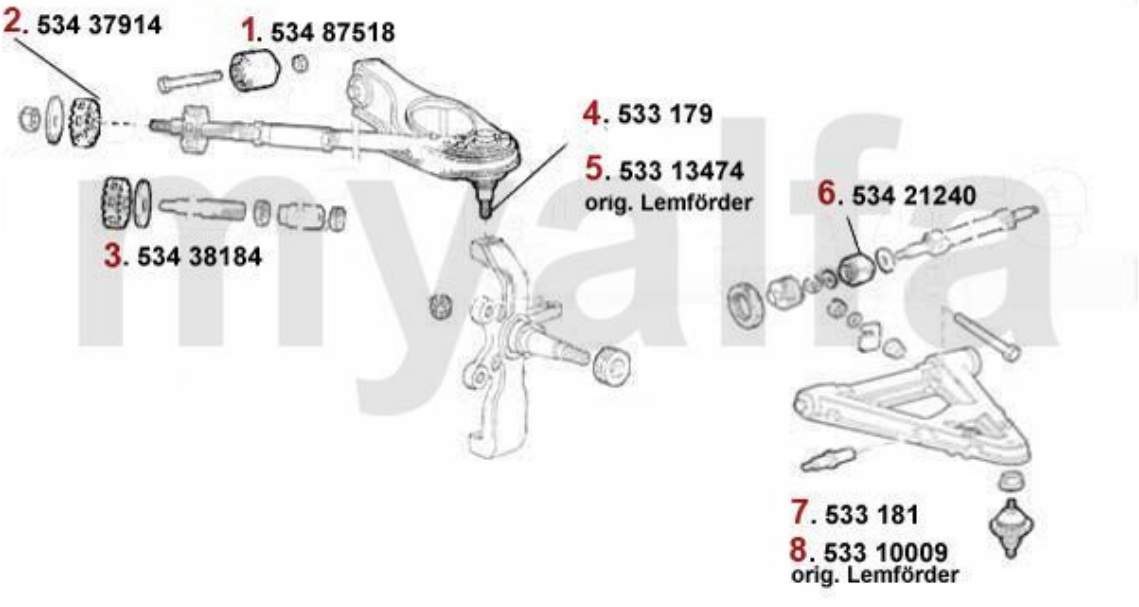

1	53487518	OE. 60521269 FRONT WISHBONE BUSH 75,GTV6 (116) RZ/SZ	€10.00
2	53437914	OE. 60521263 RUBBER 75, GTV6 (116)	€3.78
2	5340061	Front Strut/Caster Bar Kit of 4 Lipped/Recessed Bushes & 2 Stainless Steel Tubes Note: Sp	€58.74
3	53438184	OE. 60521264 RUBBER 75, GTV6	€3.78
4	533179	OE. 60728728 UPPER BALL JOINT 116	€37.73
5	53313474	OE. 60728429 Front upper ball joint LMI	On request
6	53421240	OE. 60521240 LOWER ARM BUSH 116 FA	€35.00
7	533181	OE. 60521236 LOWER BALL JOINT 116	€38.57
8	53310009	OE. 60521236/7 LOWER BALL JOINT LEMFÖRDER	On request

Aufhängung/Attachment 75 hinten/rear

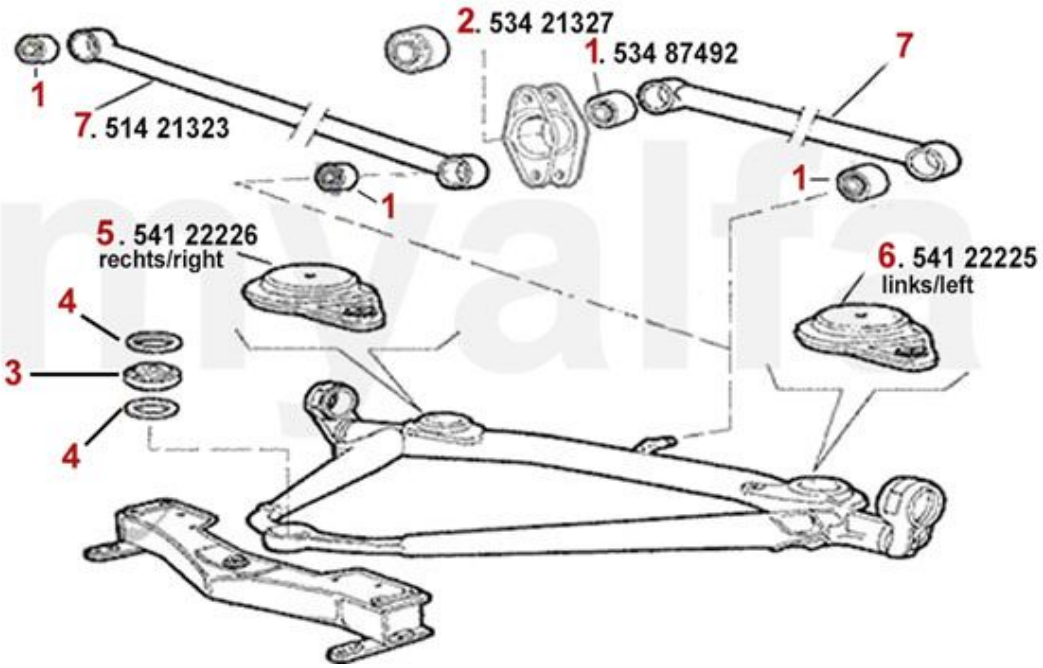

1	5341970	SET SUPERFLEX BUSHES 116 REAR AXLE TORSION BAR	€100.00
1	53487492	OE. 60521328 REAR AXLE MOUNT 75, Alfetta, Giulietta, GTV6, RZ/SZ	€8.07
2	53421327	OE. 60521327 BUSH	€14.71
3	53493399	OE. 60533942/60703781 FRONT BUSHING DEDION, TRANSAXLE, V6 & TWIN SPARK	€28.99
3	53488248	OE. 60700773 FRONT BUSHING DEDION TRANSAXLE, 4-CYLINDER (NOT TWIN SPARK)	On request
3	5340090	FRONT DEDION BUSH 53mm, TRANSAXLE, V6 & TWIN SPARK, STRENGTHENED, SUPERFLEX	€57.98
3	5340100	FRONT DEDION BUSH 45mm, 4-CYLINDER (NOT TWIN SPARK), STRENGTHENED, SUPERFLEX	€48.32
4	53433966	OE. 60533966 RING f. PANHARD/GEAR 116	On request
5	54122226	OE. 60522226 MOUNT FOR REAR AXLE FRAME RIGHT SIDE, GTV6, 75	€73.95
6	54122225	OE. 60522225 MOUNT FOR REAR AXLE FRAME LEFT SIDE, GTV6, 75	€73.95
7	51421323	OE.60521323 TORSION BAR 116	On request

Stabilisator vorne/Stabilizer front 75

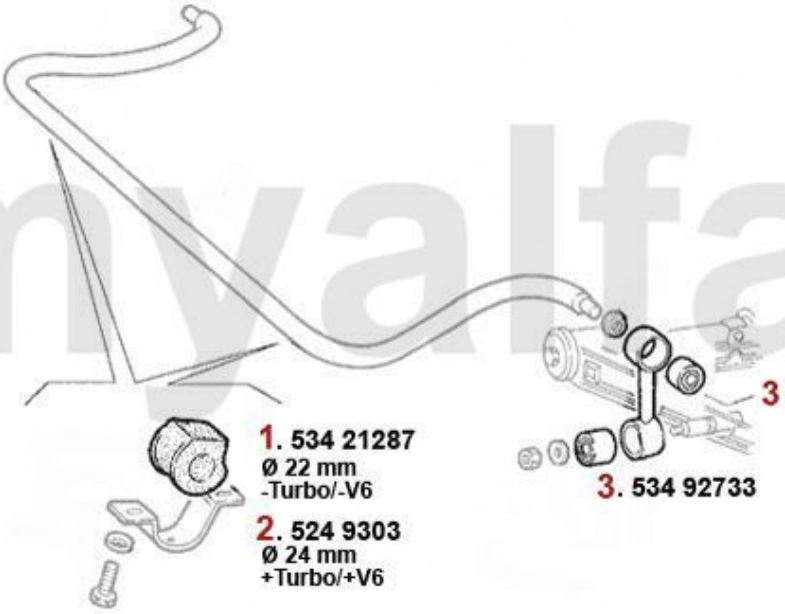

1	53421287	ANTI ROLL BAR RUBBER FRONT SET (2) 22MM ALFETTA, GIULIETTA,GTV6, 75	€13.36
2	5249303	ANTI-ROLL BAR RUBBER FRONT 24mm 75 3.0 V6 AND TURBO	€12.52
3	53492733	FRONT UPPER/LOWER ANTI ROLL BAR DROP LINK BUSH 33 mm,	€11.90

Stabilisator hinten/Stabilizer rear 75

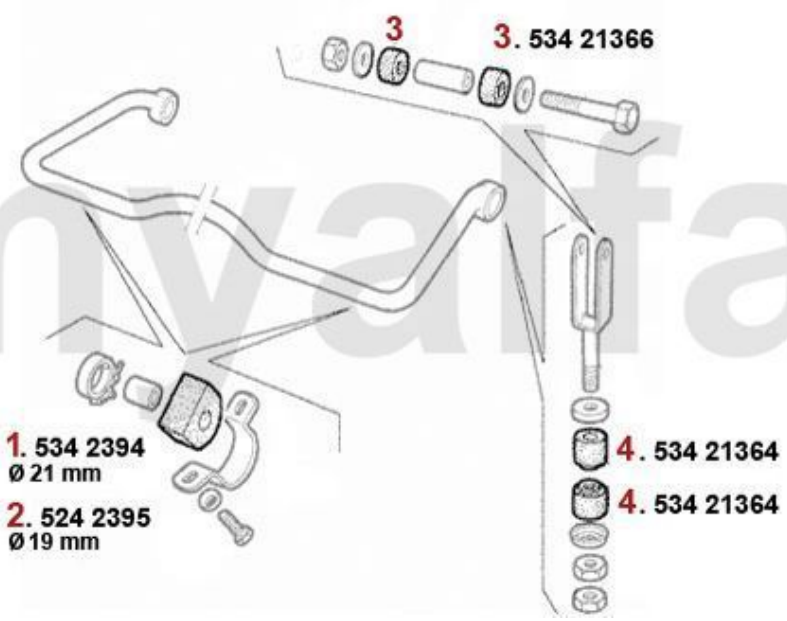

1	5342394	SET ANTI-ROLL BAR RUBBER REAR ALFETTA,GIULIETTA, 75 (21mm)	€24.79
2	5242395	SET ANTI-ROLL BAR RUBBER REAR 75 1.6-1.8 ie (19mm) SUPERFLEX	€22.27
3	53421366	OE. 60521366 STABILIZER BUSH 75 ,90, ALFETTA, GTV6 (116), GIULIETTA	€5.13
4	53421364	OE. 60521364 TIE ROD BUSH ALFETTA, GIULIETTA, GTV6 (116), 75	€3.28

Radlager/Wheel Bearing 75

vorne/front:



hinten/rear:



1	544614	FRONT WHEEL BEARING SET 116 FROM 1980 ON	€44.12
2	54417371	REAR LEFT WHEEL BEARING KIT, 75, 90, GTV6 (116) 01.1985 >	€75.55
2	54417372	REAR RIGHT WHEEL BEARING KIT , 75, 90, GTV6 (116) 01.85 >	€75.55
3	54417332	WHEEL BEARING SET REAR RIGHT 116 1981-85	€74.79
3	54417331	WHEEL BEARING SET REAR LEFT 116 ->(till) 1985	€74.79

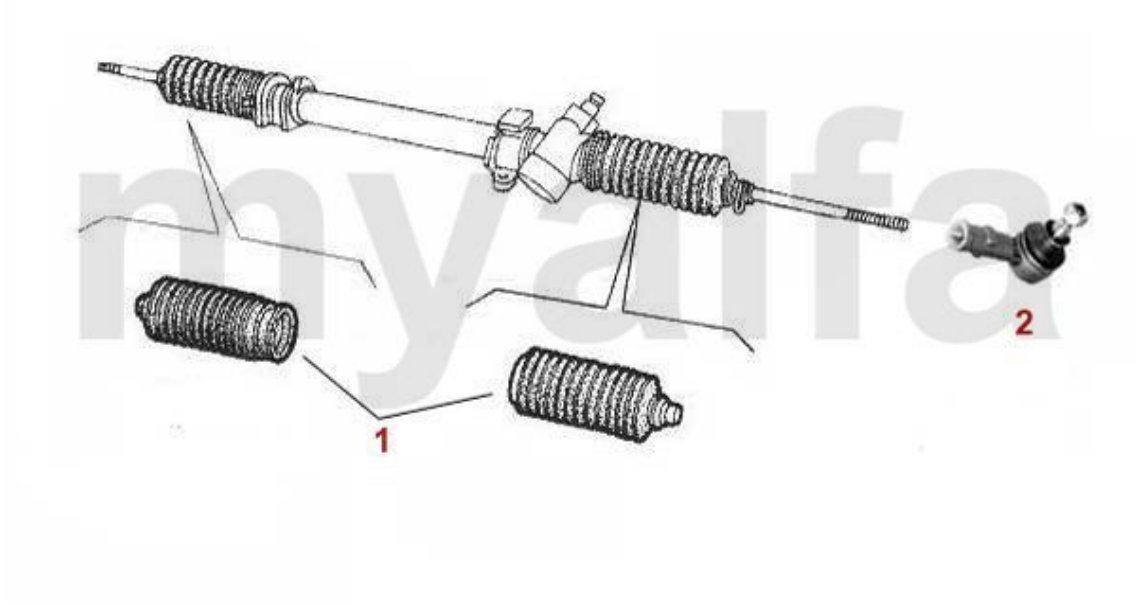

1	5552291	OE. 9943860 STEERING BOOT ZF 116 WITH POWER STEERING	€18.99
1	55522911	OE. 60548920 STEERING BOOT SPICA 116 WITHOUT POWER STEERING, 29/37 mm	€17.56
2	554180	OE. 60521320 TIE ROD END ALFETTA, GTV6, GIULIETTA, 75, 90, RZ, SZ	€23.95

Lenkgetriebe/Steering Rack 75



1. 551 32980
manuell



2. 551 64342
hydraulisch/hydraulic

myalfa

1	*55132980*	*OE. 6052133 STEERING RACK 75*	*On request*
2	*55164342*	*OE. 60564342 STEERING RACK 116*	*On request*

Bremsscheiben/Brakedisks 75

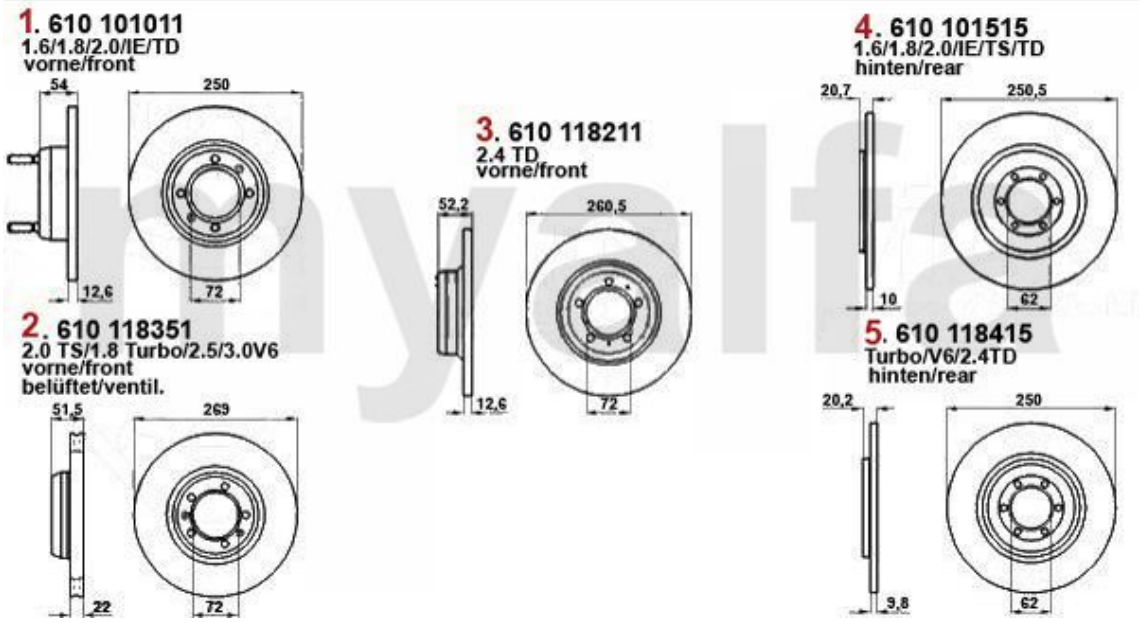

1	61001011	OE.60526087 FRONT BRAKE DISC GIULIETTA 1.3/ 1.6/ 1.8/TURBO,75 1.6/1.8/2.0/TD	€67.14
2	61018351	OE. 60522092 FRONT BRAKE DISC 75 VENTIL.	€75.00
3	61018211	Bremsscheibe VA 90/75 2.4 TD 6-Zyli nder Diesel	€64.71
4	61001515	OE. 60701786 REAR BRAKE DISK 116	€54.62
5	61018415	OE. 60533971 REAR BRAKE DISC	€50.34

Brembeläge/Brakepads 75

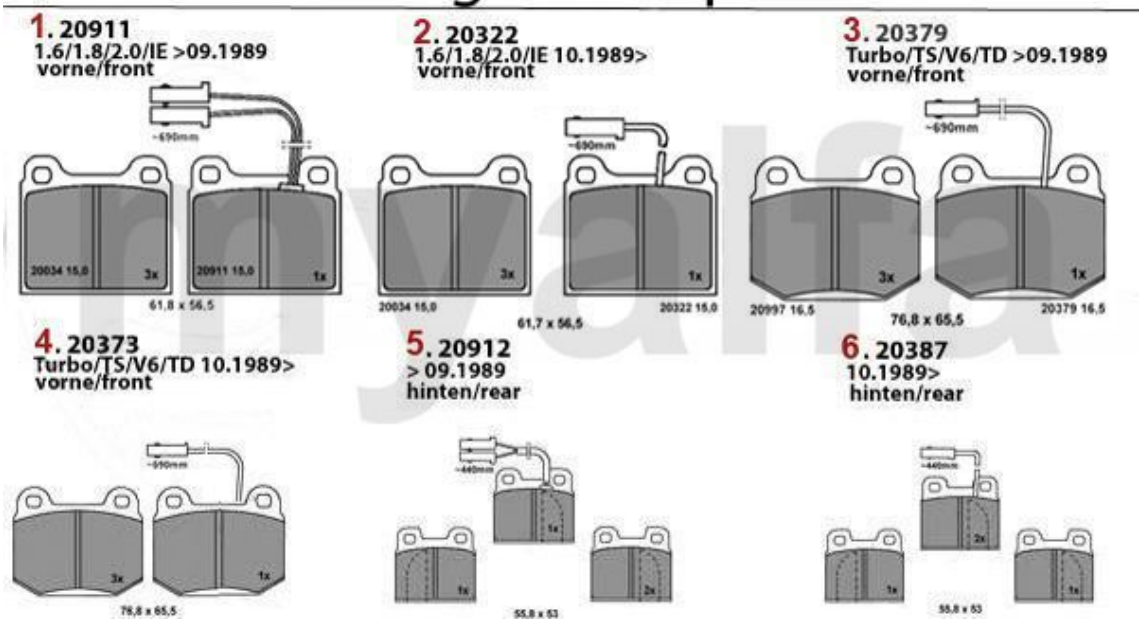

1	20911150	OE. 60778257 FRONT BRAKE PADS	€82.77
2	20322150	SBB VA mit WE 75 1.6/1.8/IE Bj. 10.89> Bremssystem: Ate	€55.00
3	20379165	OE. 60778470 FRONT BRAKE PADS	€76.72
4	20373165	FRONT BRAKE PADS 75 Turbo/TS/V6/TD Bj. 10.89>	€63.03
5	20912150	OE. 60740845 REAR BRAKE PADS	€68.49
6	20387150	OE. 60760092 BRAKE PAD SET 75 REAR w. WARNSYSTEM	€66.39

Bremsbelagzubehör/Brakepadattachment 75

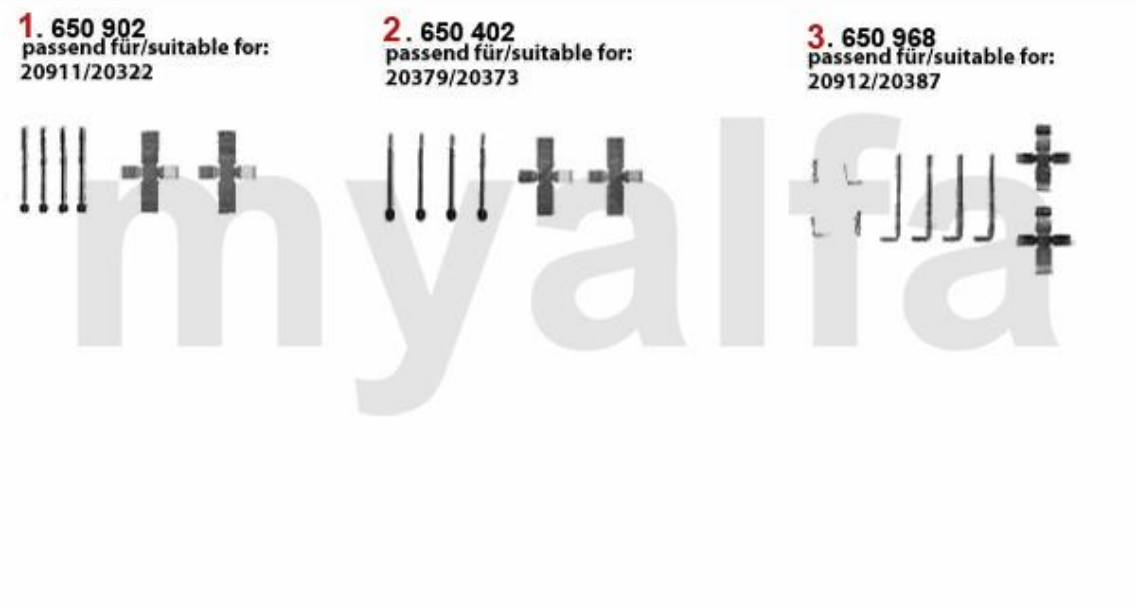

1	*650902*	*SBB-Zubehör für 1300400/20034 4x stift 2x kreuzfeder*	*€6.47*
2	*650402*	*BRAKEPADATTACHMENT f. 20323, 20379*	*€13.03*
3	*650968*	*BRAKE MOUNTING KIT 116 REAR BRAKE*	*€16.72*

Bremszangen/Calipers 75



1	*6610292*	*BRAKE CALIPER 1300-1600 1964-85 FRONT RIGHT, SYSTEM ATE*	*€133.61*
2	*6610291*	*BRAKE CALIPER 1300-1600 1964-85 FRONT LEFT, SYSTEM ATE*	*€133.61*
3	*66111027*	*BRAKE CALIPPER ALUMINIUM TYPE BREMBO FRONT LEFT GTV6 / 75 V6 / 90 V6*	*€184.03*
4	*66111028*	*BRAKE CALIPPER ALUMINIUM TYPE BREMBO FRONT RIGHT GTV6 / 75 V6 / 90 V6*	*€184.03*
5	*66111007*	*OE. 60760085 BRAKE CALIPER REAR LEFT 116, SYSTEM: ATE*	*€184.03*
6	*66111008*	*OE. 60760086 BRAKE CALIPER REAR RIGHT 116, SYSTEM: ATE*	*€184.03*

BKV/Hauptbremszylinder/Brakeservo/Brake master cylinder 75

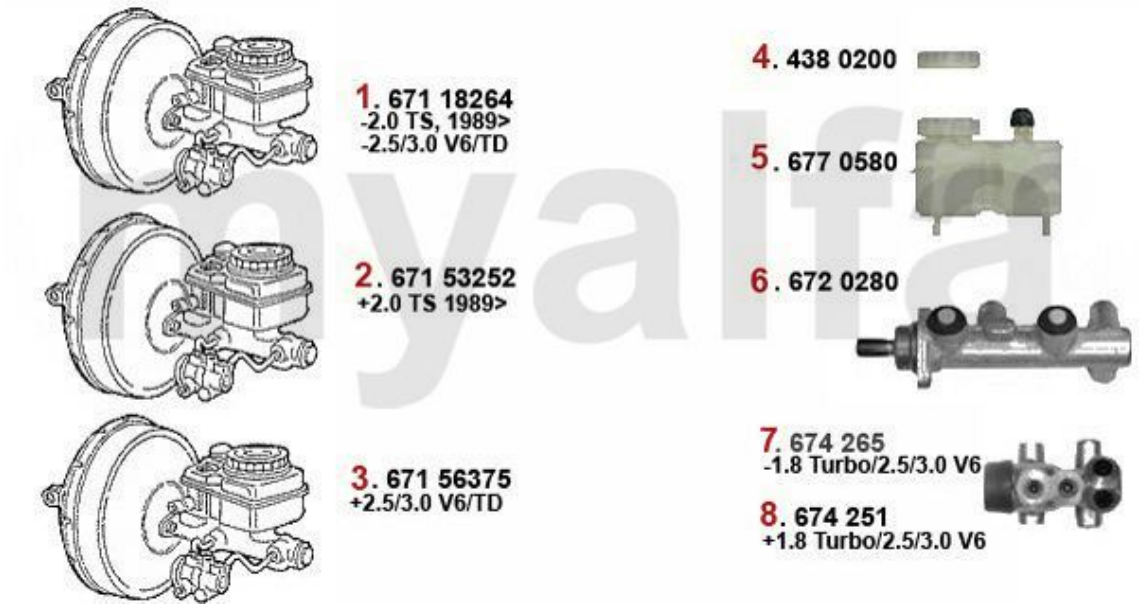

1	67118264	OE: 60518264 BRAKE BOOSTER BENDIX	€234.75
2	67153252	OE. 60553252 BRAKE SERVO	On request
3	67156375	OE. 60777081 BRAKESERVO	€402.52
4	4380200	CAP BRAKE / CLUTCH RESERVIORE HANGING PEDALS	€11.34
5	6770580	BRAKE FLUID RESERVOIR HANGING PEDALS	On request
6	6720280	BRAKE MASTER CYLINDER HANGING PEDALS 20,6MM	€105.80
6	67245043	BRAKE MASTER CYLINDER ATE ORIG. HANGING PEDALS 20,6MM	€209.16
7	674265	BRAKE VALVE 75,90,Giulietta,GT /V 2.0 (116)	€184.03
8	674251	OE. 60518251 BRAKE VALVE	On request

Bremskraftregler/Brake Valve 75



1	*674265*	*BRAKE VALVE 75,90,Giulietta,GT /V 2.0 (116)*	*€184.03*
2	*674251*	*OE. 60518251 BRAKE VALVE*	*On request*

Bremsschlauch/Brake Hose 75



1	*67610084*	*OE. 71736935 BRAKE HOSE*	*€20.00*
2	*67616851*	*OE. 60728512 BRAKEHOSE REAR 116 > 1983*	*€22.27*

Handbremsseil/Brake Cable 75



1	*6802519*	*OE. 60521838 BRAKE CABLE 116 1980>*	*€40.00*

Zündanlage/Ignitionsystem 75 Verg./Carb.



1	81210	ELECTRONIC IGNITION COIL 33, 75 , 90, ARNA, SUD/SPRINT, ALFETTA, GIULIETTA >1986 SYSTEM: MARELLI	On request
2	81212	OE. 60504288 IGNITION COIL	On request
3	8170800	DISTRIBUTOR CAP MARELLI, NO POINTS	€16.76
4	8170320	DISTRIBUTOR CAP 1974-93 BOSCH, NO CUT OUT	€10.00
5	8160810	ROTOR ARM MARELLI DISTRIBUTOR, NO POINTS	€8.99
6	81685	OE. 60723008 DISTRIBUTOR ROTOR	On request
7	8181519	IGNITION WIRE SET 75 4-CYL.	€76.72
8	BA2HL	SPARK PLUG "myalfa" 2HL	€7.48
9	BP6ES	OE. 71736278 SPARK PLUG NGK	€4.12
10	BP6ET	SPARK PLUG NGK WITH 3 ELECTRODES 155 2.0 16V TURBO	€6.47

Zündanlage/Ignitionsystem 75 IE



1	8121560	INGNITION COIL INJECTION SPIDER 1986-93	€67.14
2	8170320	DISTRIBUTOR CAP 1974-93 BOSCH, NO CUT OUT	€10.00
3	816134	ROTOR SPIDER - engine with fuel injection 90-93,33	€14.20
4	8181519	IGNITION WIRE SET 75 4-CYL.	€76.72
5	BA2HL	SPARK PLUG "myalfa" 2HL	€7.48
6	BP6ES	OE. 71736278 SPARK PLUG NGK	€4.12
7	BP6ET	SPARK PLUG NGK WITH 3 ELECTRODES 155 2.0 16V TURBO	€6.47

Zündanlage/Ignitionsystem 75 Turbo



1	81212	OE. 60504288 IGNITION COIL	On request
2	8170320	DISTRIBUTOR CAP 1974-93 BOSCH, NO CUT OUT	€10.00
3	8161470	REDOR ARM BOSCH SPIDER 1990-93 WITH SHAFT	€0.00
4	BPR6ES	SPARK PLUG NGK GTV/SPIDER (916) 3.0 V6,2.0 V6 TURBO FROM 1998> ON	€4.87

Zündanlage/Ignition System 75 TS



1	81413319	OE. 60513319 COIL 75,164 2.0	On request
2	8170320	DISTRIBUTOR CAP 1974-93 BOSCH, NO CUT OUT	€10.00
3	81637573	Distributor Rotor 164 >92	On request
4	8181516	OE. 60534745/6 IGNITION LEAD	€167.23
5	BCP6ES	BCP6E SPARK PLUG NGK	€4.12
6	816134	ROTOR SPIDER - engine with fuel injection 90-93,33	€14.20

Zündanlage/Ignition System 75 V6



1	81212	OE. 60504288 IGNITION COIL	On request
2	8121560	INGNITION COIL INJECTION SPIDER 1986-93	€67.14
3	817117	DISTRIBUTOR CAP BOSCH 6,75,90, GTV6 (116) 6-CYLINDER 1981-94	€35.71
4	81687	OE. 60732287 ROTOR 75, 90, RZ/SZ, GTV6 (6 CYLINDER)	€33.53
5	816112	OE. 60735406 ROTOR BOSCH SYSTEM OVERSPEED TRIP UNIT 6300 U/min 116 6-CYL	On request
6	8181526	IGNITION LEAD SET 75 V6, GTV6 (116) , RZ/SZ	€172.69
7	BP7ES	OE. 60512929 SPARK PLUG NGK BP7ES	€4.12

Aggregate/Aggregats 75 Vergaser/Carburator



1	8220170	STARTER MOTOR 9 TEETH 1971-89	€175.63
2	82130970	Lichtmaschine 6,75,90,Alfetta 2.0/2 .4 TD	On request
3	82135630	OE. 46231758 ALTERNATOR	€200.00

Aggregate/Aggregats 75 IE



1	*8220170*	*STARTER MOTOR 9 TEETH 1971-89*	*€175.63*
2	*82131280*	*ALTERNATOR 65A BUILT IN REGULATOR*	*€167.23*

Aggregate/Aggregats 75 Turbo



1	8220170	STARTER MOTOR 9 TEETH 1971-89	€175.63
2	82131280	ALTERNATOR 65A BUILT IN REGULATOR	€167.23

Aggregate/Aggregats 75 TS



1	82215630	STARTER MOTOR 9 TOOTH	€158.82
1	82214965	BOSCH STARTER MOTOR, 9 TEETH	On request
2	82131280	ALTERNATOR 65A BUILT IN REGULATOR	€167.23

Aggregate/Aggregats 75 2.5/3.0 V6



1	*82210790*	*OE. 60555389/60521994 STARTER 116 6-CYL.*	*On request*
2	*82131280*	*ALTERNATOR 65A BUILT IN REGULATOR*	*€167.23*

Aggregate/Aggregats 75 2.0/2.4 TD



1	82212610	Anlasser 75 1.6 bj. 85-89 75 90,Alfetta 2.4 TD	€266.39
2	82130970	Lichtmaschine 6,75,90,Alfetta 2.0/2 .4 TD	On request
3	82135630	OE. 46231758 ALTERNATOR	€200.00

Schalter/Switches 75

1 843 41704



myalfa

1	*84341704*	*OE. 60741704 COLUMN SWITCH 75, 90, RZ/SZ*	*€117.56*

0	*172751*	*SET FLOOR MATS 75, BLACK, EMBROIDERED EMBLEM, REAR SIDE LATEX*	*€74.79*
1	*17275*	*SET FLOOR MATS FOR ALFA 75, BLACK WITH RED EMBLEM, REAR SIDE : LATEX*	*€57.98*

0	*9822250*	*BATTERY LIFE SAFER*	*€32.35*
0	*9822260*	*BATTERY CHARGER AB-4 ABSAAR*	*€33.53*
3	*8701130*	*BATTERY SWITCH / MASS POLE CLAMP*	*€8.32*

1	*17275*	*SET FLOOR MATS FOR ALFA 75, BLACK WITH RED EMBLEM, REAR SIDE : LATEX*	*€57.98*

0	*9850040*	*FENDER PROTECTOR MYALFAGROUP*	*€33.53*