ALFA GIULIETTA (116)

All prices including tax, delivery costs are extra

Table Of Content

BODY 4
LIGHTING 4
FENDER PANEL/SILL 5
WHEELARCH/ENDPANEL 6
DOOR PANEL 6
CAR COVER 6
ENGINE 7
V-BELTS 7
FUEL SYSTEM 8
FUEL PUMP 8
FUEL MANAGEMENT 9
INTAKE MANIFOLD 9
ENGINE GASKETS 10
GASKETS ENGINE 10
HEAD SET 11
FULL SET 12
REINZ UNIVERSAL 13
COOLING SYSTEM 14
RADIATOR 14
1.3 14
1.6 15
1.8 16
2.0 17
THERMOSTAT 18
1.3 18
1.6 19
1.8 20
1.8 Turbo 21
2.0 22
WATERPUMP 23
1.6 23
1.3 24
1.8 25
1.8 Turbo 26
2.0 27
RADIATOR HOSES 28
ENGINE MOUNT 29
VALVE GEAR 30
CAMSHAFT 30
TIMING CHAIN 31
VALVE MECHANISM 32
PISTONS/BEARINGS 33
PISTONS 33
BEARINGS 34
FILTER 36

FILTER 36
EXHAUST SYSTEM 37
2.0 TD 37
1.3 38
1.6 39
1.8 40
2.0 41
DRIVETRAIN 42
DRIVESHAFT 42
GEAR MOUNT 43
CLUTCH SET 44
CLUTCH ACTUATION 45
SIDE SHAFT 1.3/1.6/1.8/2.0 46
SUSPENSION 47
SPRINGS 47
SHOCK ABSORBER 48
ATTACHMENT FRONT 49
ATTACHMENT REAR 50
STABILIZER FRONT 51
STABILIZER REAR 52
WHEEL BEARING 53
STEERING 54
STEERINGPARTS 54
BRAKES 55
BRAKE DISCS 55
BRAKE PADS 56
BRAKE PAD ATTACHMENT 57
CALIPER 58
BRAKE SERVO/BRAKE MASTER CYL. 59
BRAKE VALVE 60
BRAKE HOSES 61
BRAKE CABLE 62
ELECTRIC 63
ENGINE ELECTRIC 63
DISTRIBUTOR 63
IGNITION PARTS 64
STARTER/ALTERNATOR 65
IGNITION SWITCH 66
MISCELLANEOUS 67
CAR COVER 67
BATTERY CHARGERS 68
FENDER PROTECTOR 69

Beleuchtung/Lightning Giulietta (116)



myalfa

3	*15412183*	*INDICATOR LENSE RIGHT, GIULIETTA (116)*	*On request*
4	*15412184*	*INDICATOR LENSE LEFT, GIULIETTA (116)*	*On request*
5	*152340*	*Nebelscheinwerfer li/re Arna Sud Sp rint,Giulietta*	*On request*
6	*15312398*	*Rückleuchte rechts Giulietta*	*On request*
7	*15312399*	*Rückleuchte links Giulietta*	*On request*

Reparaturbleche/Repairpanels Giulietta (116)

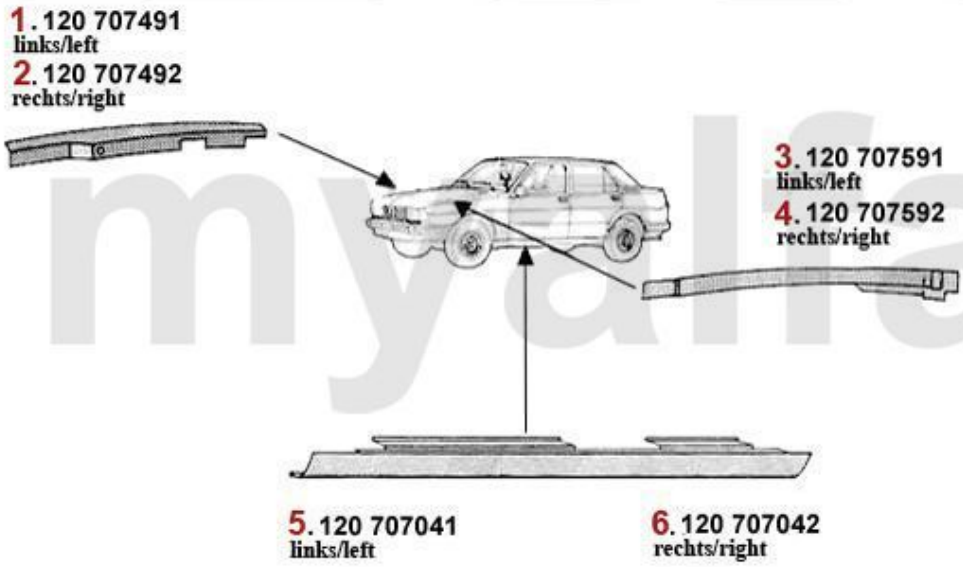

1	*12007491*	*LEFT FENDER PANEL GIULIETTA (116)*	*On request*
2	*12007492*	*RIGHT FENDER PANEL GIULIETTA (116)*	*On request*

Car Cover Giulietta (116)

1. 911 108 0
blau/blue

2. 911 274 0
rot/red





1 ***9111080*** ***CAR COVER ECOLINE GIULIA, RED*** ***€49.58***

Keilriemen/V-Belt Giulietta

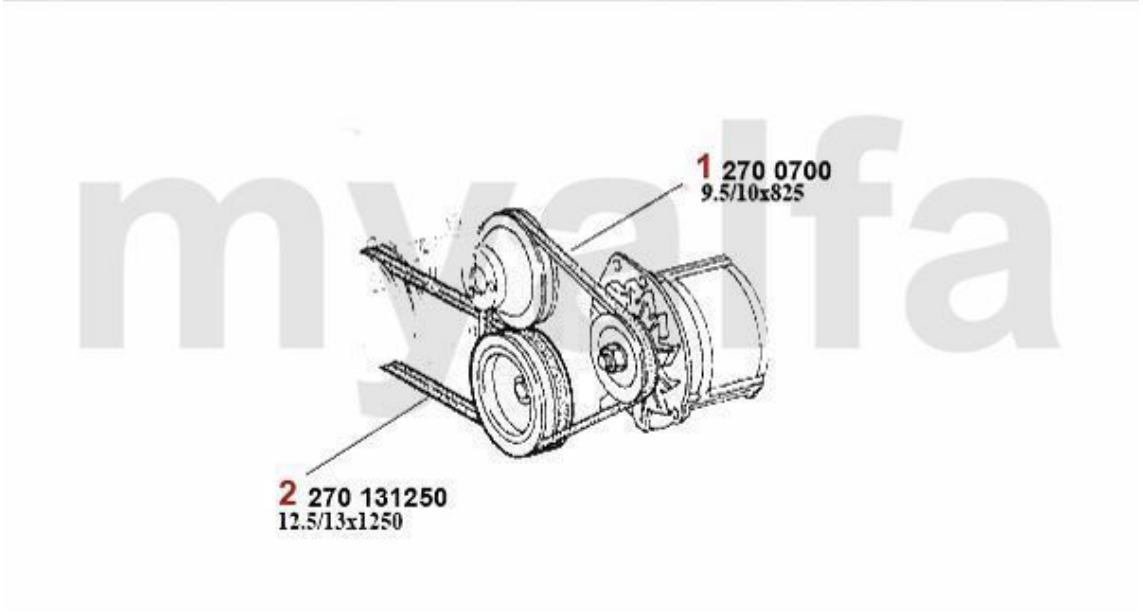

1	*2700700*	*V-BELT 9.5x825*	*€7.48*
2	*27031250*	*V-BELT 12.5x1250 ALFETTA, GIULIETTA,GTV (116) 4-CYLINDERCLIMATE COMPESSOR*	*€17.65*

Kraftstoffpumpe/Fuel Pump Giulietta



1	*2530100*	*FUEL PUMP CARBURETTOR MODELS*	*€44.45*
2	*2533046*	*FUEL PUMP (116) CARB. 1980>*	*€47.82*
3	*2533107*	*Kraftstoffpumpe 6,75,90 Alfetta TD*	*On request*

Ansaugbrücke/Intake Manifold Giulietta (116)



1	2330160	INTAKE MANIFOLD GASKET 1600-2000 CARBURETTOR MODELS FROM 1968 ON	€11.43
1	2520120	CARBURETTOR MOUNT (SET) NBR 40 mm, 1st SERIES	€117.56
1	2520140	CARBURETTOR MOUNT (SET) NBR 40 mm, 2nd SERIES	On request
5	2520340	CARBURETTOR RUBBER MOUNT 45 mm	€29.41
6	2330770	HD CARBURETTOR MOUNT GASKET 45 mm TS-9003	€1.47
9	2522384	DOUBLE CARBURETTOR RUBBER MOUNT 40 mm. 116 4-CYLINDER 06.1983>, SPIDER 1600 1990-93 PREMIUM QUALITY	€74.79
10	2522383	SINGLE CARBURETTOR RUBBER MOUNT 40 mm, 116 4-CYLINDER 06/1983>, SPIDER 1600 1990-93 PREMIUM QUALITY	€40.00
11	23318080	GASKET CARBURETTOR RUBBER MOUNT / INTAKE MANIFOLD SPIDER 1600 1990-93	€1.26

Dichtungen Motor/Gaskets Engine 116 4-Cyl. Vergaser/Carb.

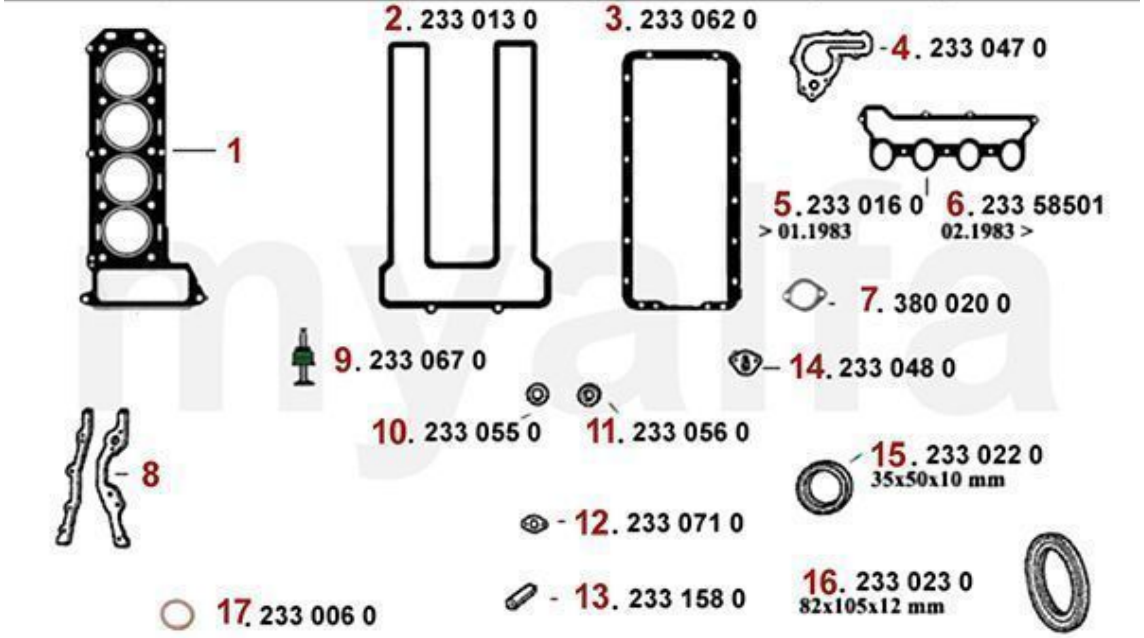

1	2330440	HEAD GASKET 1600 REINZ BEST QUALITY	€47.90
1	2330450	HEAD GASKET 1750 REINZ BEST QUALITY	€44.12
1	2330460	HEAD GASKET 2000 REINZ BEST QUALITY	€46.64
1	2330690	HEAD GASKET 1600 COPPER - 1.85 MM	€64.62
1	2330680	HEAD GASKET 2000 COPPER - 1,85MM	€64.62
2	2330130	CAM COVER GASKET WITH SILICONE STRIP	€22.10
2	2330650	VALVE COVER GASKET REINZ (2mm)	€39.41
3	2330620	UPPER SUMP GASKET WITH SILICONE STRIP	€27.65
4	2330470	WATERPUMP GASKET - 105, 115, 101 1600 - FOR MECHNICAL REV-COUNTER	€4.79
5	2330160	INTAKE MANIFOLD GASKET 1600-2000 CARBURETTOR MODELS FROM 1968 ON	€11.43
6	23358501	INTAKE MANIFOLD GASKET SPIDER 1600 1990-93	€15.88
7	3800200	GASKET CYLINDER HEAD / EXHAUST MANIFOLD	€3.11
8	2331330	TIMING COVER GASKET SET (5pc)	€15.88
9	2330670	VALVE SEAL reinforced inlet/black	On request
10	2330550	CAM COVER SCREW GASKET ALUMINIUM (SET 2PC) 750/101/102/106/105/116	€2.69
11	2330560	CAM COVER SCREW GASKET FIBRE	€4.96
12	2330710	GASKET REV COUNTER ALIGNMENT	€2.44
13	2331550	MAIN BEARING 'CIGARETTE' OIL SEAL	€3.32
14	2330480	PUEL PUMP GASKET	€2.02
15	2330220	OIL SEAL CRANK SHAFT FRONT 35/50/10	€7.98
16	2330230	OIL SEAL CRANK SHAFT REAR 82/105/12 750/101/105/115/116 UP TO 1989, OEM QUALITY	€27.65
17	2330060	SUMP PLUG WASHER SUMP / TRANSMISSION / DIFFERENTIAL	€1.34

Kopfdichtsatz/Head Set Giulietta (116) Vergaser/Carb.

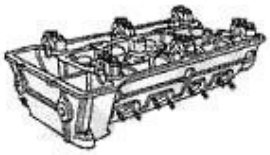

Achtung/Attention:
Dichtsatz ohne Kopfdichtung, bitte separat bestellen!/Headset without HEADGASKET, please order seperate!

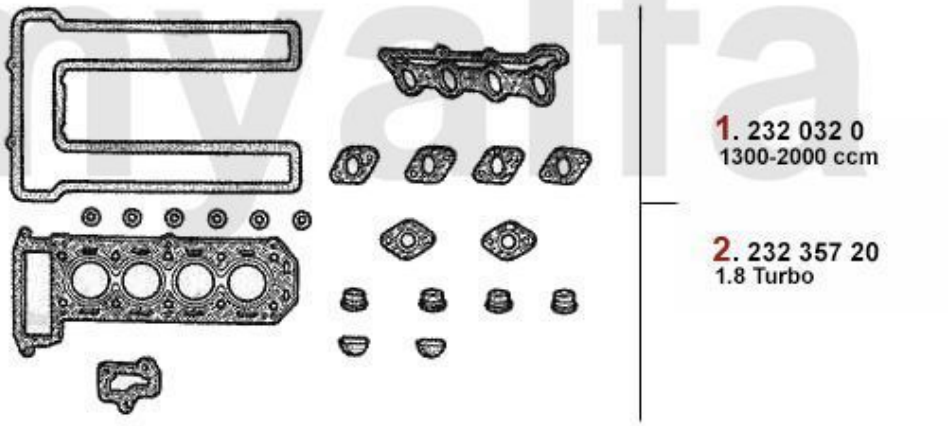

1	*2321320*	*HEAD GASKET SET WITHOUT CYLINDER HEAD GASKET CARBURETTOR FROM 1982 ON*	*€50.00*
2	*23235720*	*Kopfdichtsatz 1.8 Turbo*	*€133.61*

Motordichtsatz/Full Set Giulietta (116)



Achtung/Attention:

In den Dichtsätzen 231 0400, 231 0410 & 231 0390 sind Zylinderkopfdichtung und Wellendichtringe nicht enthalten, bitte separat bestellen!/ The sets 231 0400 & 231 0410 are without HEADGASKET and OILSEALS, please order it separate!

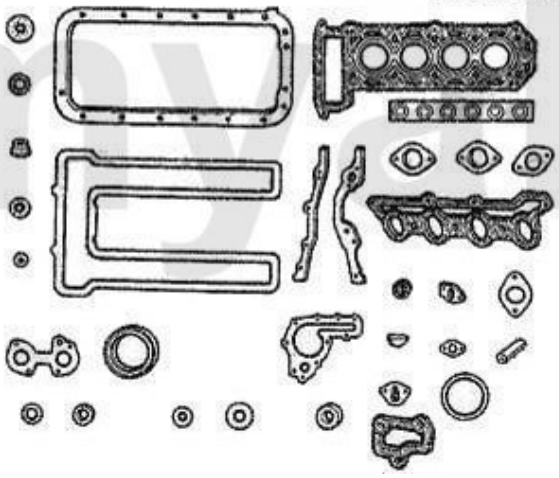

1. 231 0390
1300 ccm

2. 231 0400
1600 ccm

3. 231 4220
1800 ccm/Turbo

4. 231 0410
2000 ccm

1	*2310390*	*ENGINE GASKET SET 1300 WITHOUT HEAD GASKET AND OIL*	*On request*
2	*2310400*	*ENGINE GASKET SET 1600 WITHOUT HEAD GASKET AND OIL SEALS*	*On request*
3	*23142200*	*OE. 60778180 FULL SET*	*€189.83*
4	*2310410*	*ENGINE GASKET SET 2000 WITHOUT HEAD GASKET AND OIL*	*On request*

0	*2333490*	*XXL UNIVERSAL KIT FOR DIY GASKET MADE BY REINZ*	*€29.41*

Kühler/Radiator Giulietta (116) 1.3

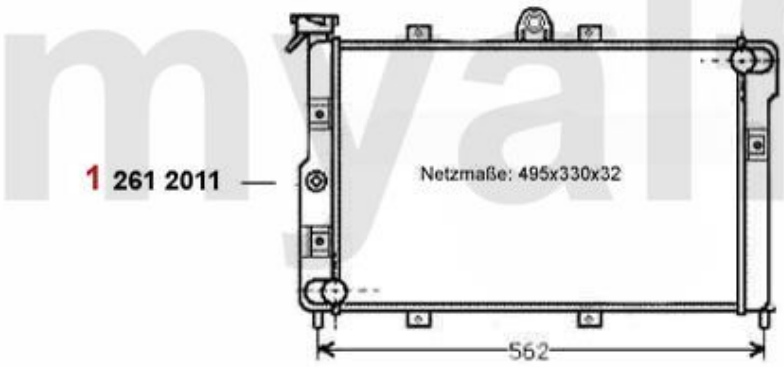

1	*2612011*	***Motorkühler Alfetta 1.6 Bj. 75-84 G iulietta 1.3/1.6 Bj. 10.77>*** ***ACHTUNG: auf Netzmaße acht***	*On request*

Kühler/Radiator Giulietta (116) 1.6

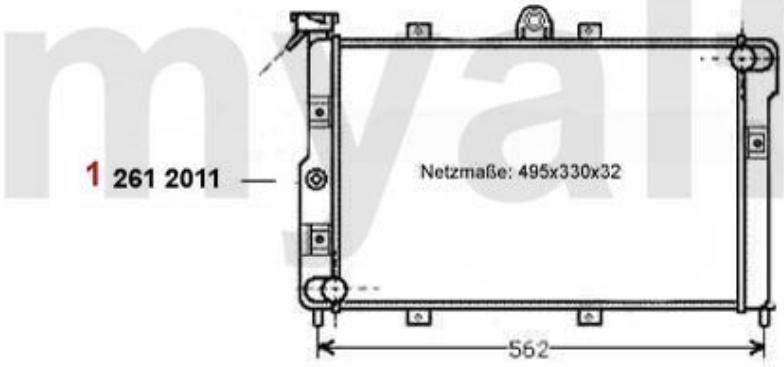

1	*2612011*	*Motorkühler Alfetta 1.6 Bj. 75-84 G iulietta 1.3/1.6 Bj. 10.77>* *ACHTUNG: auf Netzmaße acht*	*On request*

Kühler/Radiator Giulietta (116) 1.8

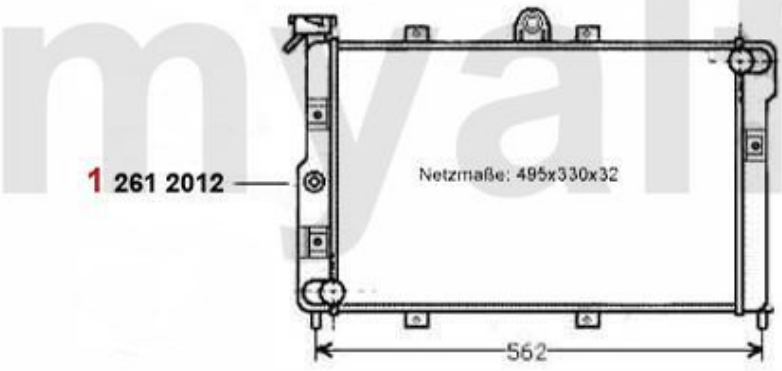

1	*2612012*	***Motorkühler Alfetta/Giulietta 1.8/ 2.0 Bj. 78-85 ACHTUNG: auf Netzmaße achten!!!***	*On request*

Kühler/Radiator Giulietta (116) 2.0

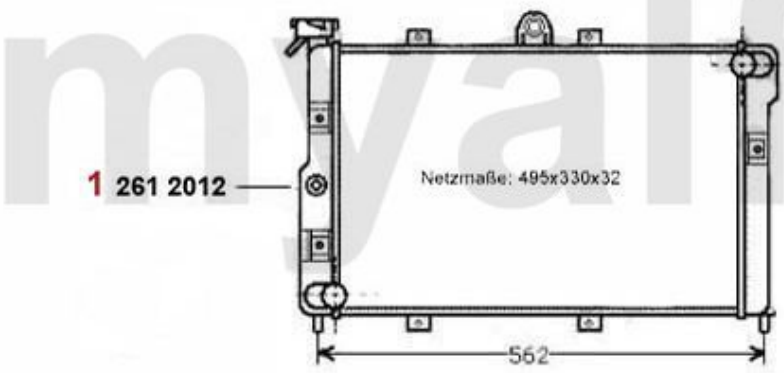

1	*2612012*	***Motorkühler Alfetta/Giulietta 1.8/ 2.0 Bj. 78-85 ACHTUNG: auf Netzmaße achten!!!***	***On request***

Thermostat Giulietta (116) 1.3



1	*2630090*	*OE. 60516212 / 60713535 THERMOSTAT 2000 IN HOUSING CARBURETTOR MODELS*	*€31.85*

Thermostat Giulietta (116) 1.6



1	*2630090*	*OE. 60516212 / 60713535 THERMOSTAT 2000 IN HOUSING CARBURETTOR MODELS*	*€31.85*

Thermostat Giulietta (116)1.8



1	*2630090*	*OE. 60516212 / 60713535 THERMOSTAT 2000 IN HOUSING CARBURETTOR MODELS*	*€31.85*

Thermostat Giulietta (116) 1.8 Turbo



1	*2630090*	*OE. 60516212 / 60713535 THERMOSTAT 2000 IN HOUSING CARBURETTOR MODELS*	*€31.85*

Thermostat Giulietta (116) 2.0



1	*2630090*	*OE. 60516212 / 60713535 THERMOSTAT 2000 IN HOUSING CARBURETTOR MODELS*	*€31.85*

Wasserpumpe/Waterpump Giulietta (116) 1.6



1	*262510*	*OE. 60730469/60523035 WATERPUMP 75, ALFETTA, GIULIETTA, GTV (116), WITH PULLEY, WITHOUT REV METER CONNECTION*	*€66.39*
2	*2620430*	*WATER PUMP 2000 IE ELECTRIC FAN*	*€96.64*

Wasserpumpe/Waterpump Giulietta (116) 1.3



1	*262510*	*OE. 60730469/60523035 WATERPUMP 75, ALFETTA, GIULIETTA, GTV (116), WITH PULLEY, WITHOUT REV METER CONNECTION*	*€66.39*
2	*2620430*	*WATER PUMP 2000 IE ELECTRIC FAN*	*€96.64*

Wasserpumpe/Waterpump Giulietta (116) 1.8



1	*262510*	*OE. 60730469/60523035 WATERPUMP 75, ALFETTA, GIULIETTA, GTV (116), WITH PULLEY, WITHOUT REV METER CONNECTION*	*€66.39*
2	*2620430*	*WATER PUMP 2000 IE ELECTRIC FAN*	*€96.64*

Wasserpumpe/Waterpump Giulietta (116) 1.8 Turbo



1	*262510*	*OE. 60730469/60523035 WATERPUMP 75, ALFETTA, GIULIETTA, GTV (116), WITH PULLEY, WITHOUT REV METER CONNECTION*	*€66.39*
2	*2620430*	*WATER PUMP 2000 IE ELECTRIC FAN*	*€96.64*

Wasserpumpe/Waterpump Giulietta (116) 2.0



1	*262510*	*OE. 60730469/60523035 WATERPUMP 75, ALFETTA, GIULIETTA, GTV (116), WITH PULLEY, WITHOUT REV METER CONNECTION*	*€66.39*
2	*2620430*	*WATER PUMP 2000 IE ELECTRIC FAN*	*€96.64*

1	26630560	OE. 60730560 UPPER RADIATOR HOSE ALFETTA/GIULIETTA 116 FROM 1982 ON	€25.13
2	2660170	RADIATOR HOSE THERMOSTAT/ WATER PUMP CARBURETTOR MODELS	€13.03
3	26630558	LOWER COOLING WATER HOSE ALFETTA 2nd SERIES 1.6 1982> /GIULIETTA 1st SERIES >3.79	€18.57
4	26630559	OE. 60730559 LOWER RADIATOR HOSE ALFETTA/GIULIETTA 116 1982>	€20.59
5	2680060	RADIATOR CAP SQUARE TYPE MODELS WITH EXPANSION TANK	€10.50

Motorlager/Enginemount Giulietta (116)

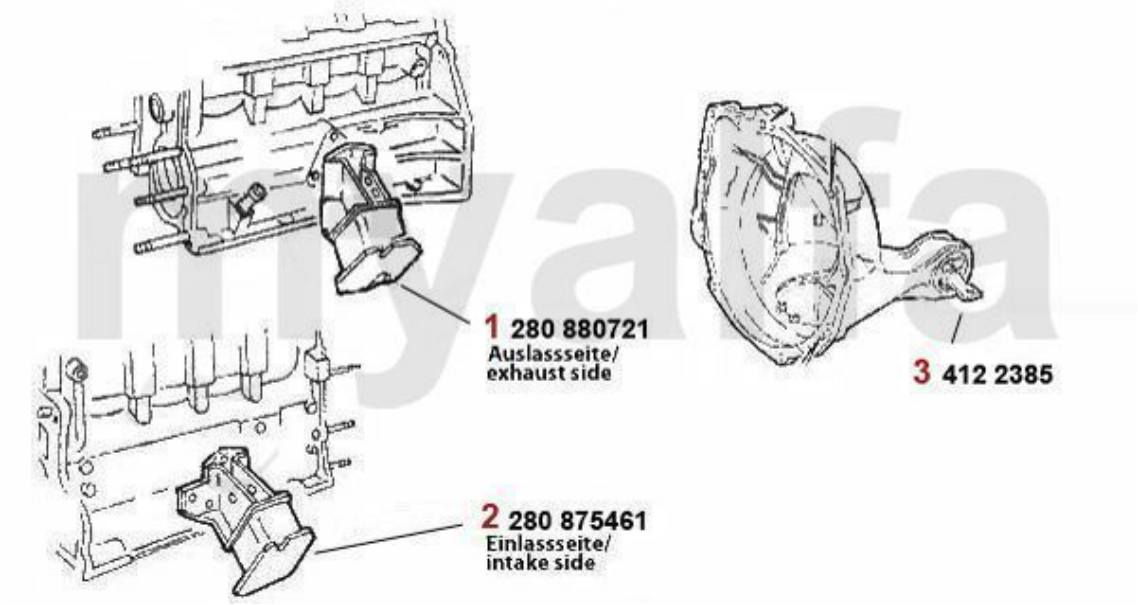

1	*28080721*	*OE. 60723675 ENGINE MOUNT LEFT 116 4-CYL.*	*€49.41*
2	*28075461*	*OE. 60521085 ENGINE MOUNT RIGHT 116 4-CYL.*	*€49.41*
3	*4122385*	*OE. 60522199 ENGINE MOUNT REAR 4 CYL.*	*€27.31*

Nockenwelle/Camshaft Giulietta

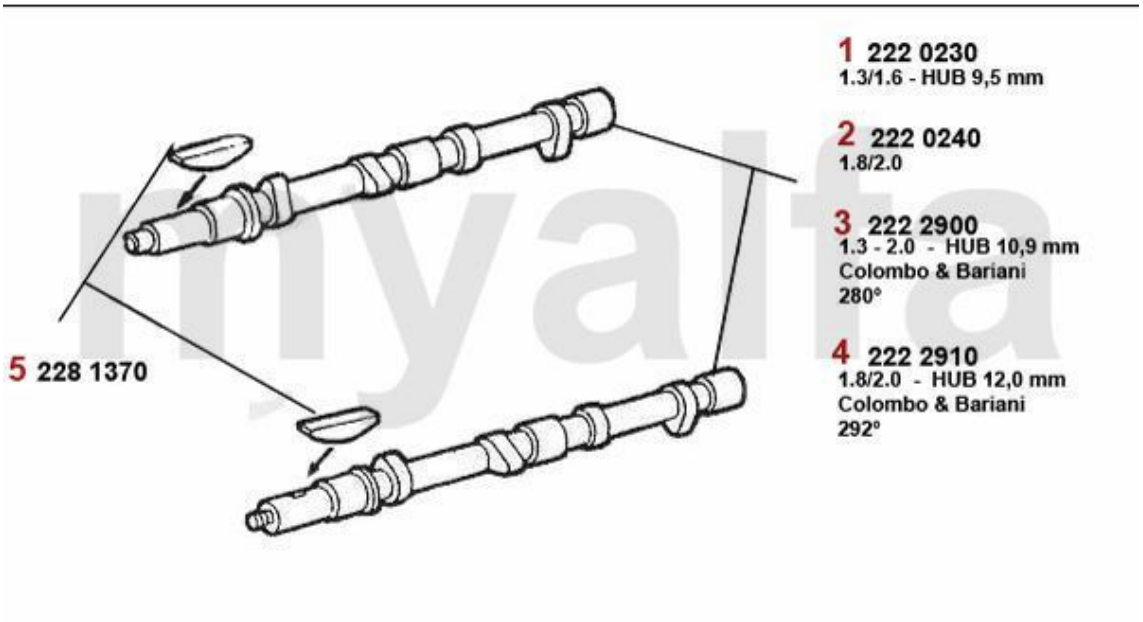

2	*2220240*	*CAMSHAFT 1750/2000 CARBURETTOR / SPIDER 1990-93 INJECTION EXHAUST ONLY*	*On request*
3	*2222900*	*CAMSHAFT 1300-2000 SPORT COLOMBO&BARIANI LIFT 10.9 mm 280°*	*€231.09*
4	*2222910*	*CAMSHAFT 1750/2000 SPORT COLOMBO&BARIANI LIFT 12.0 mm 292°*	*€231.09*
5	*2281370*	*WEDGE CAMSHAFT*	*€11.34*

Steuerkette/Timing Chain Giulietta

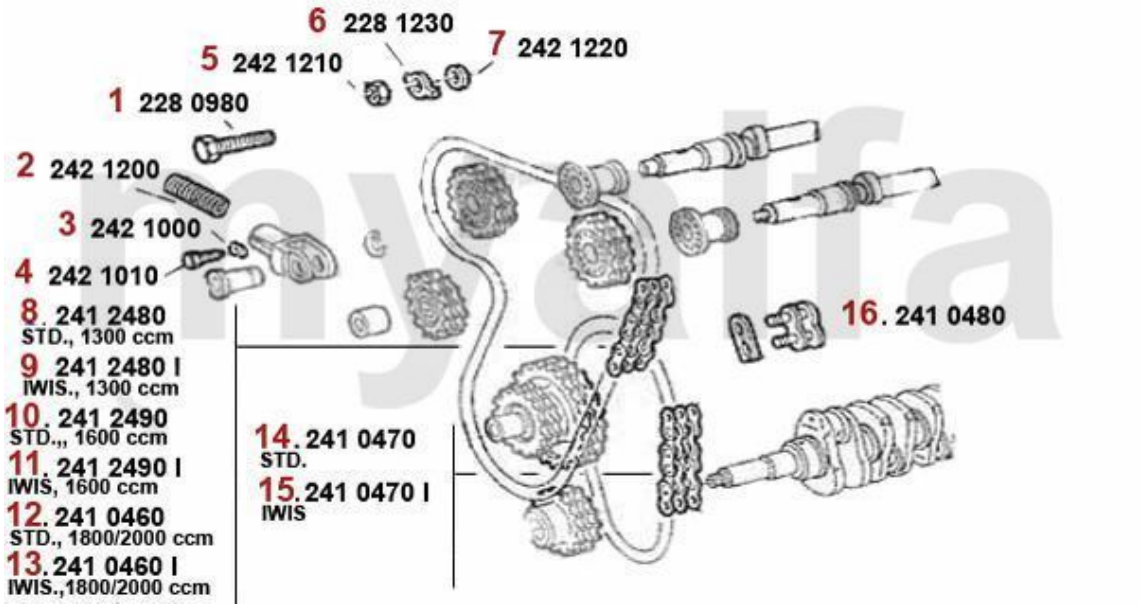

1	2280980	SAFETY SCREW CAMSHAFT	€2.94
2	2421200	CHAIN TENSIONER SPRING	€6.22
3	2421000	CHAIN TENSIONER LOCKING BLOCK	€4.62
4	2421010	CHAIN TENSIONER SCREW	€5.80
5	2421210	NUT TIMING CHAIN SPROCKET	€1.85
6	2281230	TAB WASHER CAMSHAFT	€2.10
7	2421220	WASHER TIMING CHAIN SPROCKET	On request
8	2412480	TOP TIMING CHAIN 1300 WITH LINK	€35.80
9	2412480I	TIMING CHAIN IWIS 1300 LONG WITH LINK - 101, 105, 115, 116	€71.43
10	2412490	TOP TIMING CHAIN 1600 WITH LINK	€35.80
11	2412490I	TIMING CHAIN IWIS 1600 LONG WITH LINK	€75.55
12	2410460	TOP TIMING CHAIN 1750-2000 WITH LINK	€35.80
13	2410460I	TIMING CHAIN IWIS 1750-2000 WITH LINK	€83.95
14	2410470	BOTTOM TIMING CHAIN 1300-2000 WITHOUT LINK	€23.11
15	2410470I	TIMING CHAIN IWIS 1300-2000 SHORT ENDLESS	€49.58
16	2410480	TIMING CHAIN LINK	€6.30

Ventiltrieb/Valve Mechanism Giulietta

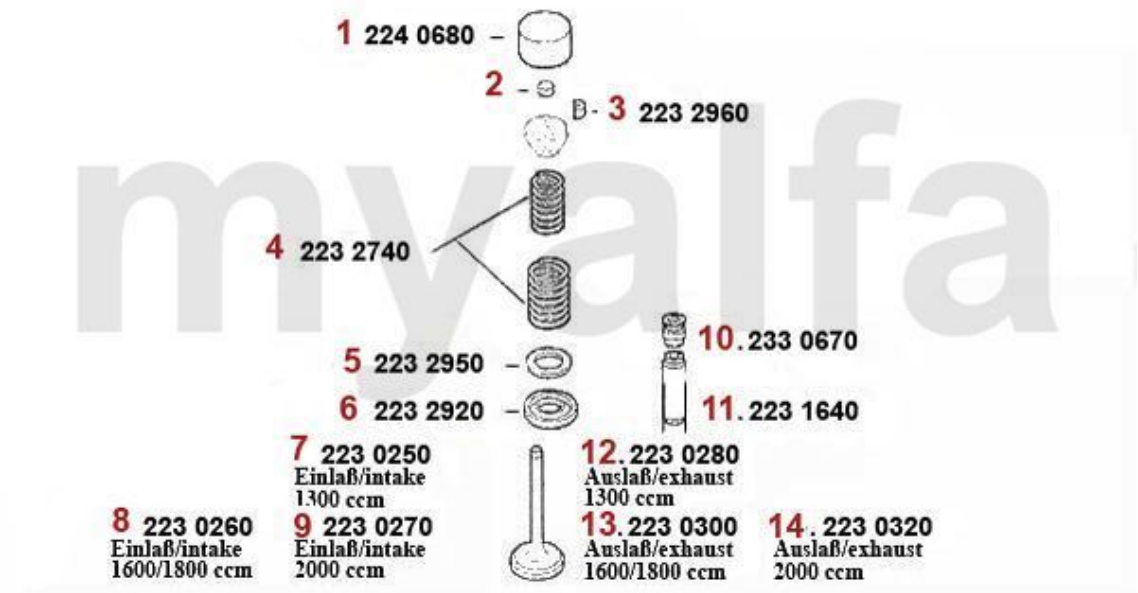

1	2240680	CAM FOLLOWER OE-QUALITY 101/105/115/116/75/155/164	€16.39
1	2240710	CAM FOLLOWER DLC RACING MADE IN ITALY 101/105/115/116/75/164	€36.89
2	2431140	SET VALVE SHIMS 200 PIECES 2,525 - 3,5 mm, DIAMETER 9mm	€469.75
2	2430840	SET VALVE SHIMS 205 PIECES 1,5 - 2,5 mm, DIAMETER 9mm	€469.75
2	2430430	VALVE SHIM 9MM PLEASE SUBMIT THE SIZE YOU NEED	€10.42
3	2232960	VALVE COTTER 9MM	€1.60
4	2232740	SET VALVE SPRINGS 16 PIECES	€75.55
5	2232950	SHIM VALVE CUP / SPRING	€2.98
6	2232920	VALVE SPRING CUP	On request
7	2230250	INTAKE VALVE 1300 37 mm	€13.95
8	2230260	INTAKE VALVE 1600-1750 41 mm	€13.36
9	2230270	INTAKE VALVE 2000 CARBURETTOR 44 mm	€14.20
10	2330670	VALVE SEAL reinforced inlet/black	On request
11	2231640	VALVE GUIDE SPIDER 1990-93 INJECTION	€11.68
12	2230280	EXHAUST VALVE 1300 34 mm	€14.03
13	2230300	EXHAUST VALVE 1600-1750 37 mm	€14.03
14	2230320	EXHAUST VALVE 2000 40 mm	€17.65

Kolben/Pistons Giulietta (116)

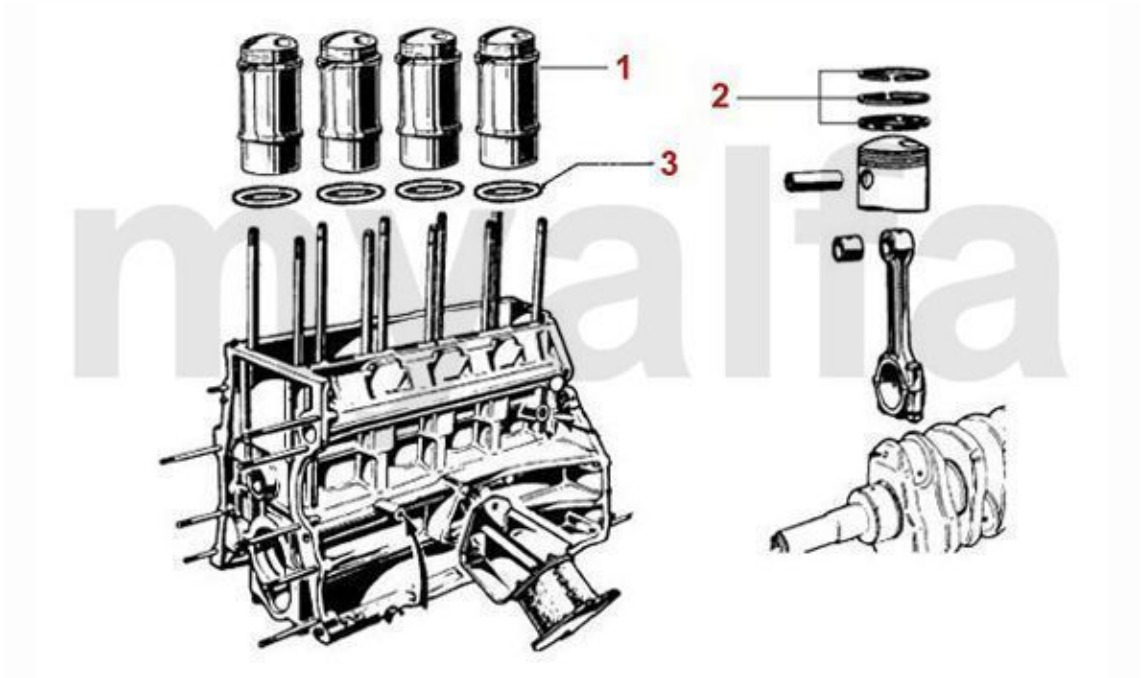

1	2212215	PISTON / LINER 2000 CARBURETTOR	€121.85
1	2212235	PISTON / LINER 2000 HIGH COMPRESSION 10,4 : 1	€133.61
1	2212195	PISTON / LINER 1600	€116.81
1	2212205	PISTON / LINER 1750	€116.81
1	2212245	PISTON / LINER 2000 MOTRONIC	€142.02
1	2212464	OE. 60778505 ASSEMBLY	On request
2	2282715	SET PISTON RINGS 1600 1.5/1.75/3.5mm (FOR 1 PISTON)	On request
2	2280915	SET PISTON RINGS 1600 1.5/1.75/4.0mm (FOR 1 PISTON)	€29.75
2	2282235	SET PISTON RINGS 1750 1.5/1.75/3.5mm (FOR 1 PISTON)	€32.69
2	2282245	SET PISTON RINGS 1750 1.5/1.75/4.0mm (FOR 1 PISTON)	€32.77
2	2282935	SET PISTON RINGS 2000 1.5/1.75/4.0mm (FOR 1 PISTON)	€32.77
2	2280925	SET PISTON RINGS 2000 1.5/1.75/4.5mm (FOR 1 PISTON)	€30.76
2	22847840	OE. 60721009 PISTON RINGS SET V6, 156, 164, 166, gtv/spider (916), 75 1.8 Turbo (FOR 1 PIS	€57.98
3	2330880	O-RING LINER 1600/1750	€2.94
3	2330900	O-RING LINER 2000	€2.31

Lager/Bearings Giulietta (116)

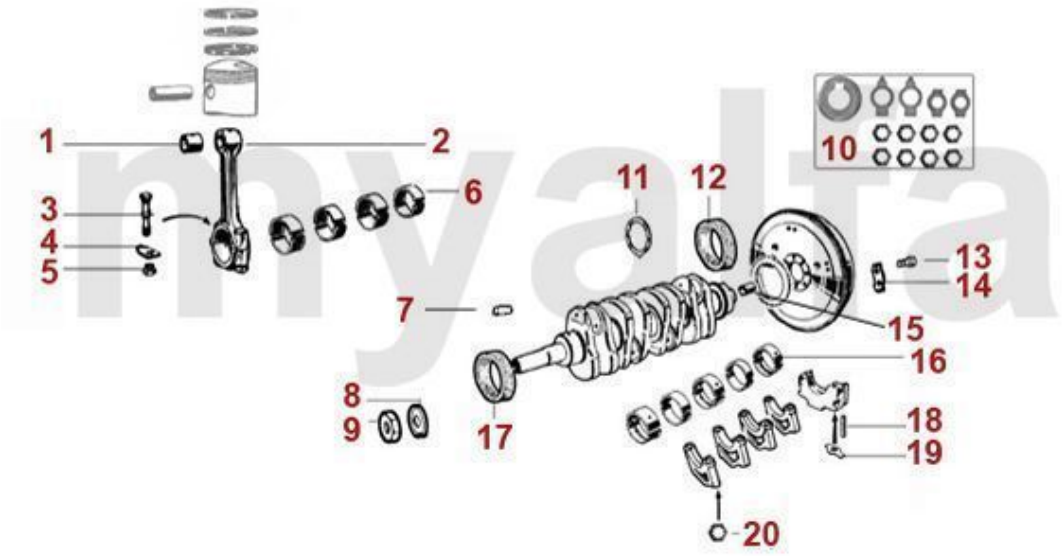

1	2260160	SMALL END BEARING 1300	€20.08
1	2261120	SMALL END BEARING 1600 - 2000	€17.56
2	2130120	CON ROD 1300 USED (PLEASE SUBMIT THE WEIGHT YOU NEED)	On request
2	2130130	CON ROD 1600 USED (PLEASE SUBMIT THE WEIGHT YOU NEED)	On request
2	2130140	CON ROD 1750 USED (PLEASE SUBMIT THE WEIGHT YOU NEED)	On request
2	2130150	CON ROD 2000 NEW	€108.40
3	2261050	CON ROD BOLT SET (2PC) 1750-2000 ALSO POSSIBLE FOR 1600	€16.72
4	2261380	TAB WASHER CON ROD NUT 1300	€1.01
4	2261390	TAB WASHER CON ROD NUT (SET 2 PCS) 1600-1750	€2.18
5	2261080	CON ROD NUT 1600-2000	€4.12
6	2260200	BIG END BEARINGS (Set) 1600-2000 1. OVERSIZE 0,10	€319.24
6	2260220	BIG END BEARINGS (Set) 1600-2000 2. OVERSIZE 0,20	€58.40
6	2260780	BIG END BEARINGS (Set) 1600-2000 3. OVERSIZE 0.30	€58.40
6	2260180	BIG END BEARINGS (Set) 1600-2000 STANDARD	€61.26
6	2260190	BIG END BEARINGS (Set) 1300 1. OVERSIZE 0,10	€72.69
6	2260210	BIG END BEARINGS (Set) 1300 2. OVERSIZE 0,20	€72.69
6	2260770	BIG END BEARINGS (Set) 1300 3. OVERSIZE 0.30	€72.69
6	2260170	BIG END BEARINGS (Set) 1300 STANDARD	€72.69
6	2260150	CON ROD BEARINGS SET KING XP RACING 1600-2000, STD	€105.80
7	2280950	ALUMINIUM PLUG CRANKSHAFT (SET 6 PCS) 6 mm DIAMETER	€10.08
7	2280960	ALUMINIUM PLUG CRANKSHAFT (SET 6 PCS) 6,25 mm	€10.08
8	2280970	TAB WASHER CRANK PULLEY NUT	€4.37
9	2280940	CRANK PULLEY NUT 1963-89	€16.39
10	2282730	TAB WASHER SET 13 PIECES MAIN BEARING / CAMSHAFT / PULLEY	€18.07
11	2240810	SET THRUST WASHERS - 101/105/115/116/75/155/164 - STANDARD	€18.91
11	2240820	THRUST WASHER SET - 101/105/115/116/75/155/164 - 0.005	€23.95
11	2240830	THRUST WASHER SET - 101/105/115/116/75/155/164 - 0.010	€23.11
12	2330230	OIL SEAL CRANK SHAFT REAR 82/105/12 750/101/105/115/116 UP TO 1989, OEM QUALITY	€27.65

13	4211550	SCREW FLYWHEEL 6 HOLE	€4.16
13	4211560	SCREW FLYWHEEL 8 HOLE	€4.96
14	4211500	TAB WASHER SCREW FLYWHEEL (SET 4 PCS) 8 HOLE	€8.32
15	2251110	CRANK SPIGOT BUSH 24 mm	€10.84
15	2251100	CRANK SPIGOT BUSH 20 mm / 1750 ccm	€9.16
16	2250100	MAIN BEARINGS (Set) 1300-2000 - 1. OVERSIZE 0,10	€66.81
16	2250110	MAIN BEARINGS (Set) 1300-2000 2. OVERSIZE 0,20	€66.81
16	2250750	MAIN BEARINGS 1300-2000 3. OVERSIZE 0.30	€66.81
16	2250090	MAIN BEARINGS (Set) 1300-2000 STANDARD	€66.81
16	2250150	MAIN BEARING SET KING XP RACING 1300-2000 STD -101/105/115/116/75/155/164	€189.83
17	2330220	OIL SEAL CRANK SHAFT FRONT 35/50/10	€7.98
18	2331550	MAIN BEARING 'CIGARETTE' OIL SEAL	€3.32
19	2251490	TAB WASHER 5th MAIN BEARING	€1.26
20	2282700	MAIN BEARING LOCKNUT	€1.60

Filter Giulietta

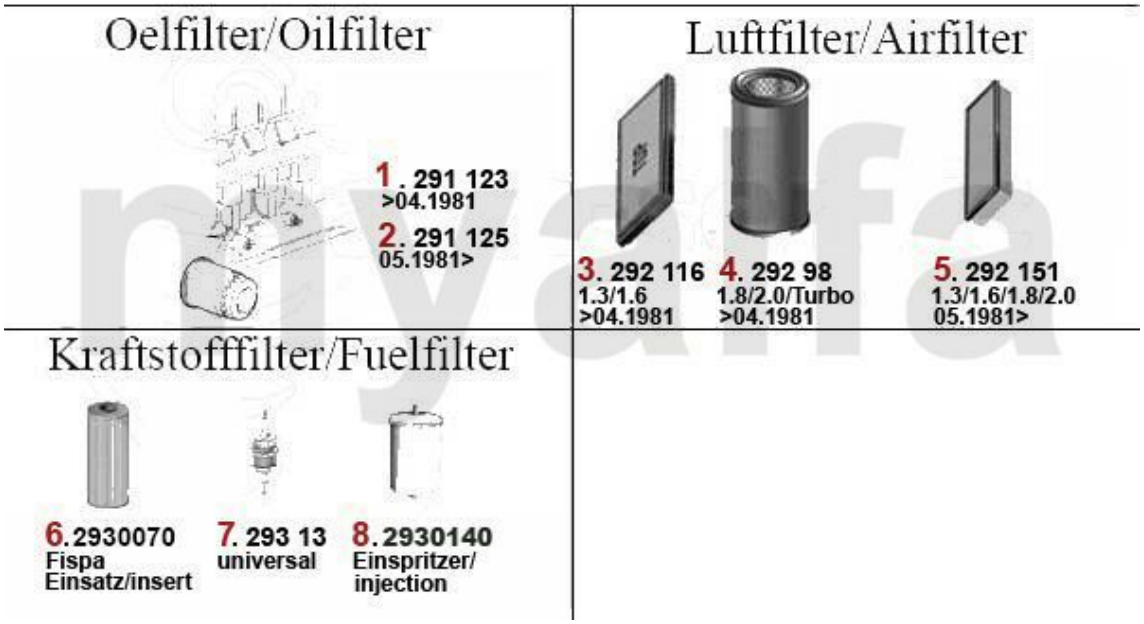

1	291123	OE. 60553431, 60537470, 60533494, 60521128 OILFILTER	€10.84
2	291125	OE. 60507080/60808974 OILFILTER	€13.36
3	292116	OE. 60723852 AIR FILTER ALFETTA, GIULIETTA, GTV/4 (116) 1.3/1.6 eckig	€50.34
4	29298	AIR FILTER ALFETTA, GIULIETTA,GTV4 (116) 1.8/2.0, SEVERAL 105 TYPES	€19.75
5	292151	OE. 60522418 AIR FILTER 75. 90. ALFETTA, GIULIETTA, GTV/4 (116), 2.0	€22.61
6	2930070	FUEL FILTER FISPA 35 mm	€6.30
7	29313	FUEL LINE FILTER (UNIVERSAL)	€6.64
8	2930140	FUEL FILTER SPIDER 2000 IE 1986-93	€23.53

Abgasanlage/Exhaustsystem Giulietta 2.0 TD



Giulietta (116) 2.0 Turbo Diesel 61 KW 1983 - 85

1	33104201	DOWNPIPE ALFETTA,GIULIETTA 1983-85 2.0,2.4 TD (ORIGINAL 1PIECE WITH MIDDLE SILENCER)	On request
2	34104176	MIDDLE SILENCER ALFETTA, GIULIETTA 2.0.2.4 TD 1979-85	On request
3	35102077	REAR SILENCER 2.0 TD 1983-85	€164.71
4	38091011	OE. 60521386 RUBBER RING	€1.93
5	38091024	OE. 60521407 EXHAUST RUBBER MOUNT	€3.95

Abgasanlage/Exhaustsystem Giulietta 1.3

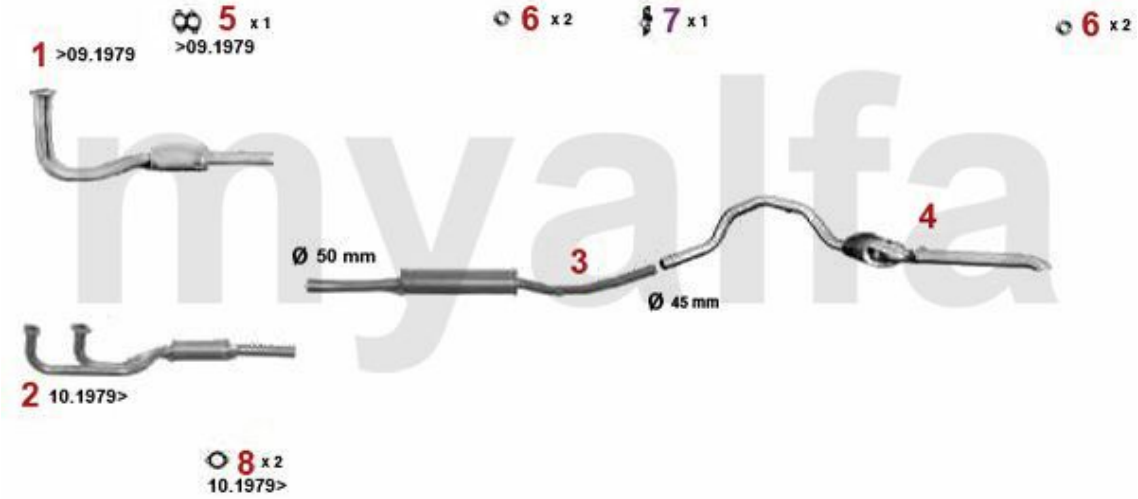

Giulietta (116) 1.3 66 KW 1977 - 83

1	33201403	PRESILENCER GIULIETTA 1.3 1977-79 (ORIGINAL ONE PIECE WITH MIDDLESILENCER)	€89.08
1	31121536	OE. 60521536 EXHAUST MANIFOLD 116 4-CYLINDER 1+4	On request
2	31121084	OE. 60521084 EXHAUST MANIFOLD 116 4-CYLINDER 2+3	€222.69
3	33201703	OE. 60526049 FRONT MUFFLER	€128.57
4	34101476	OE. 60730551 MIDDLE SILENCER	€99.92
5	35101407	OE. 60729292 REAR SILENCER	€150.42
6	3800470	GASKET ONE PIECE EXHAUST / FRONT EXHAUST SECTION	€10.50
7	38091011	OE. 60521386 RUBBER RING	€1.93
8	38091024	OE. 60521407 EXHAUST RUBBER MOUNT	€3.95
9	38094413	OE. 60777697 GASKET	€5.80

Abgasanlage/Exhaustsystem Giulietta 1.6

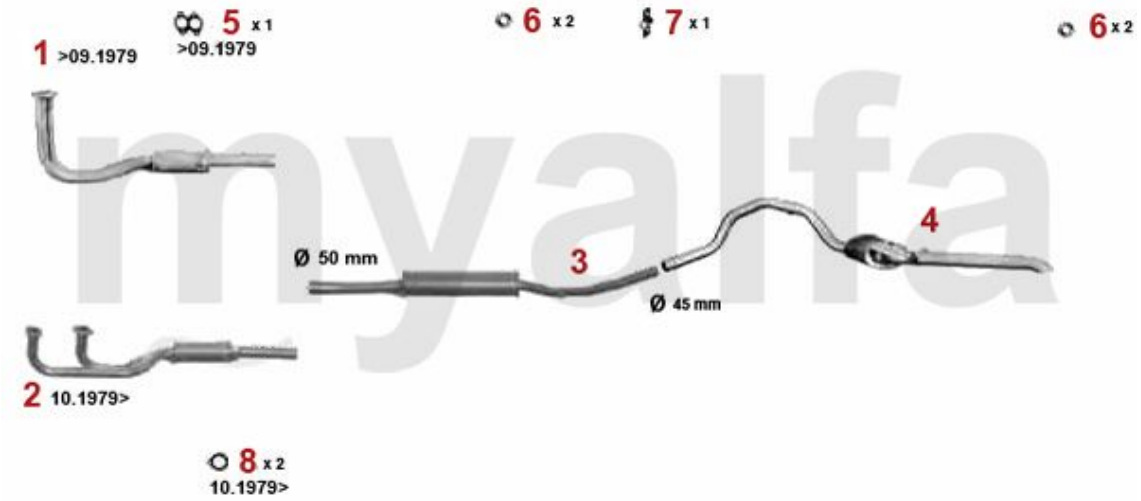

Giulietta (116) 1.6 79 KW **1977 - 83**

1	33201403	PRESILENCER GIULIETTA 1.3 1977-79 (ORIGINAL ONE PIECE WITH MIDDLESILENCER)	€89.08
2	31121084	OE. 60521084 EXHAUST MANIFOLD 116 4-CYLINDER 2+3	€222.69
2	31121536	OE. 60521536 EXHAUST MANIFOLD 116 4-CYLINDER 1+4	On request
3	33201703	OE. 60526049 FRONT MUFFLER	€128.57
4	34101476	OE. 60730551 MIDDLE SILENCER	€99.92
5	35101407	OE. 60729292 REAR SILENCER	€150.42
6	3800470	GASKET ONE PIECE EXHAUST / FRONT EXHAUST SECTION	€10.50
7	38091011	OE. 60521386 RUBBER RING	€1.93
8	38091024	OE. 60521407 EXHAUST RUBBER MOUNT	€3.95
9	38094413	OE. 60777697 GASKET	€5.80

Abgasanlage/Exhaustsystem Giulietta 1.8

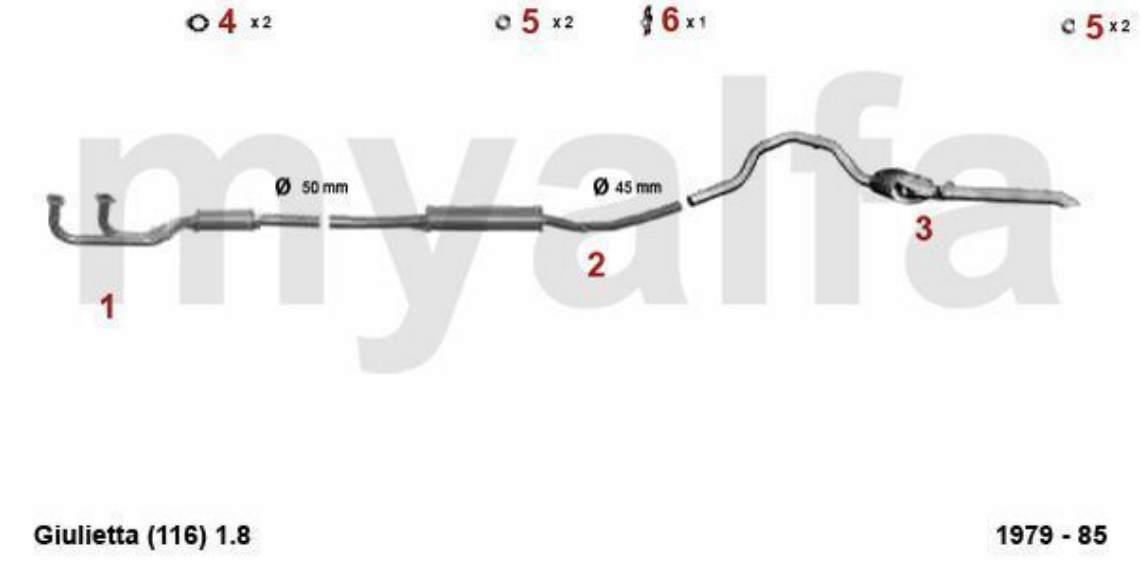

Giulietta (116) 1.8 **1979 - 85**

1	*31121084*	*OE. 60521084 EXHAUST MANIFOLD 116 4-CYLINDER 2+3*	*€222.69*
1	*31121536*	*OE. 60521536 EXHAUST MANIFOLD 116 4-CYLINDER 1+4*	*On request*
2	*33201803*	*OE. 60730546 FRONT MUFFLER*	*€136.64*
3	*34101476*	*OE. 60730551 MIDDLE SILENCER*	*€99.92*
4	*35101407*	*OE. 60729292 REAR SILENCER*	*€150.42*
5	*38094413*	*OE. 60777697 GASKET*	*€5.80*
6	*38091011*	*OE. 60521386 RUBBER RING*	*€1.93*
7	*38091024*	*OE. 60521407 EXHAUST RUBBER MOUNT*	*€3.95*

Abgasanlage/Exhaustsystem Giulietta 2.0

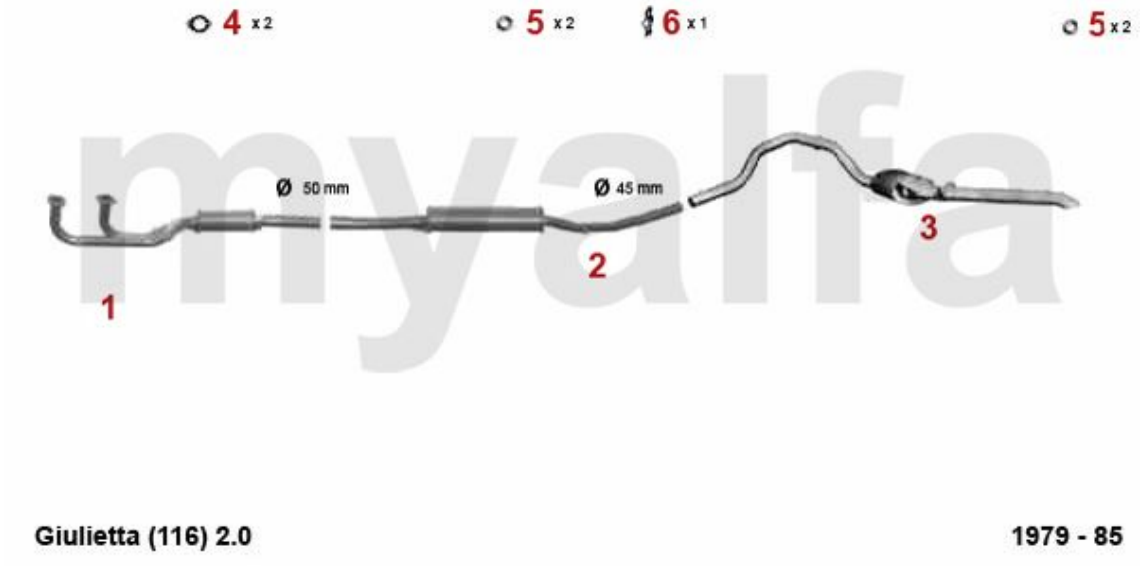

Giulietta (116) 2.0 **1979 - 85**

1	*31121084*	*OE. 60521084 EXHAUST MANIFOLD 116 4-CYLINDER 2+3*	*€222.69*
1	*31121536*	*OE. 60521536 EXHAUST MANIFOLD 116 4-CYLINDER 1+4*	*On request*
2	*33201803*	*OE. 60730546 FRONT MUFFLER*	*€136.64*
3	*34101476*	*OE. 60730551 MIDDLE SILENCER*	*€99.92*
4	*35101407*	*OE. 60729292 REAR SILENCER*	*€150.42*
5	*38094413*	*OE. 60777697 GASKET*	*€5.80*
6	*38091011*	*OE. 60521386 RUBBER RING*	*€1.93*
7	*38091024*	*OE. 60521407 EXHAUST RUBBER MOUNT*	*€3.95*

Antriebswelle/Driveshaft Giulietta (116)

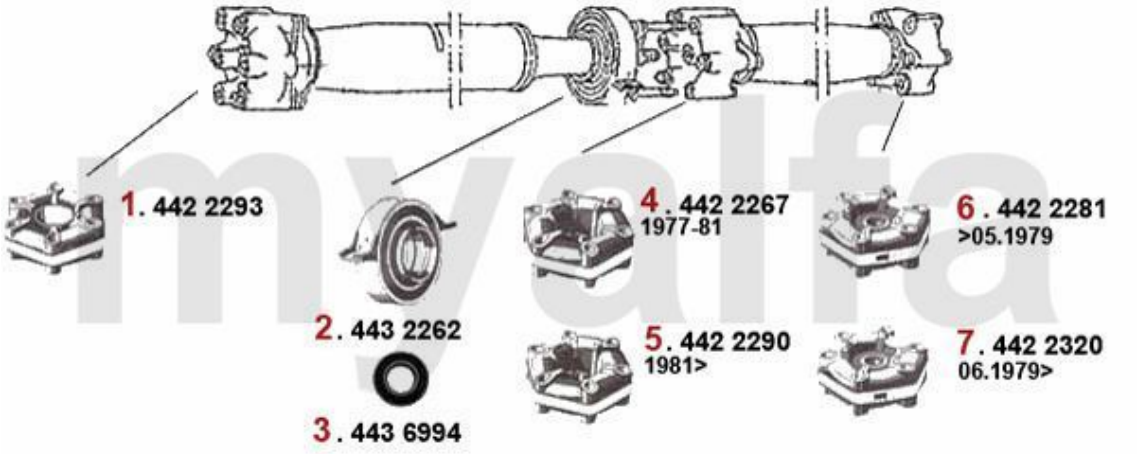

1	4422293	FRONT FLEX DISC 116 4-CYLINDERS OE.60521648	€71.43
2	4432262	OE. 60505302 PROP SHAFT CENTER SUPPORT 116 4-CYL.	€40.84
3	4436994	OE. 60505303 CENTER SHAFT BEARING ALFETTA, GTV (116), GIULIETTA,75 4 CYLINDER	€20.92
4	4422267	OE.116001530202/60521647 FLEX DISK	On request
5	4422290	MIDDLE FLEX DISC ALFETTA, GIULIETTA 11.1976 > , 75,90	€117.56
6	4422281	REAR FLEX DISC Alfetta 77>5/7960725177/116081504402	On request
7	4422320	OE.60521631 REAR FLEX DISC 116 4-CYLINDER	€74.79

Getriebeaufhängung/Gear Mount Giulietta (116)

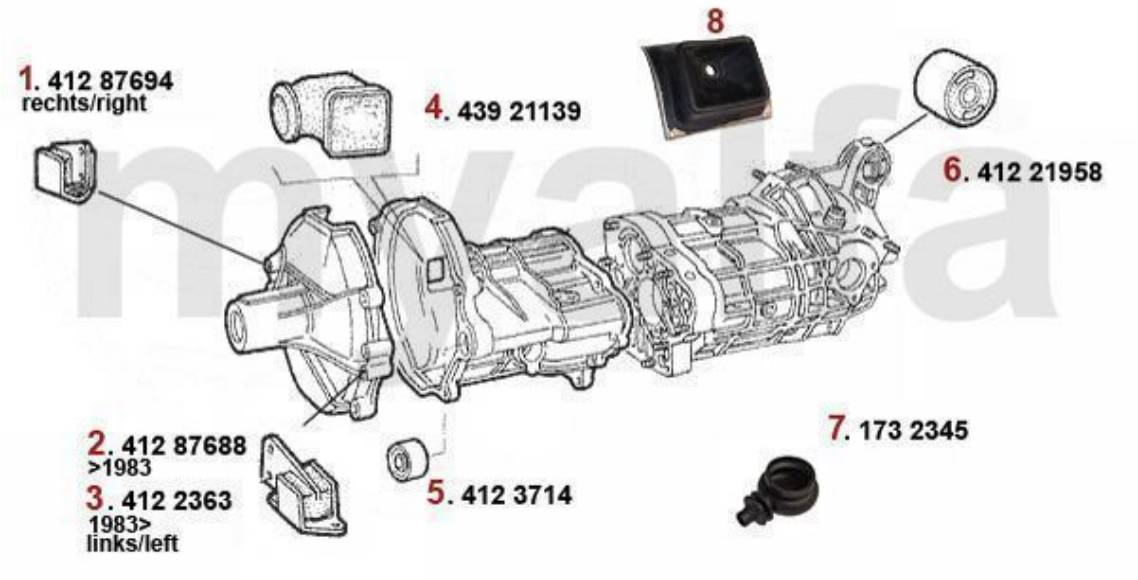

1	41287694	OE. 60521143 GEAR MOUNT 116 4-CYLINDER RIGHT	€29.33
2	41287688	OE. 60723913 GEAR MOUNT 116, 4-CYL LEFT SIDE, >1983	€29.33
3	4122363	OE. 60701586 GEAR MOUNT 116 4-CYLINDER LEFT	€29.33
4	43921139	OE. 60521139 GROMMET FOR RELEASE LEVER	€11.68
5	4123714	OE. 60523039 GEAR SHIFT BUSH AT TRANSMISSION	€23.11
6	41221958	OE. 60521958 TRANSMISSION MOUNT 75, 90, RZ SZ, ALFETTA, GIULIETTA, GTV (116)	€25.13
7	1732345	OE. 60724284 LOWER COWLING GEAR LEVER ALFETTA, GIULIETTA,	€15.04
8	1732346	OE. 60701783 COVER f. GEARSTICK 116	€95.80

Kupplungs-Kit/Clutch Set Giulietta (116)

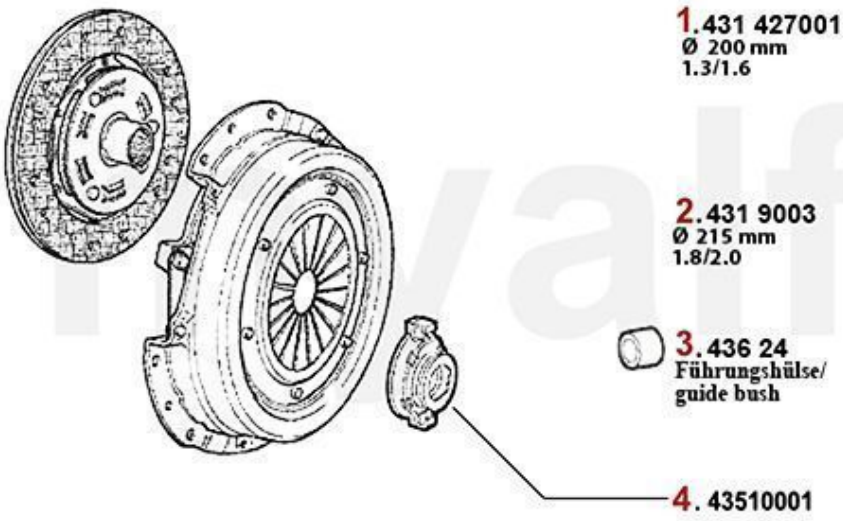

1	43142701	CLUTCH KIT 116 1.3 - 1.6	€318.49
2	4319003	CLUTCH KIT, ALFETTA, GUILIETTA,75, GTV (116), 1.6/1.8/2.0/IE/TS/TD 1974-1992	€319.24
3	43624	OE. 60522024 NEEDLE BEARING	€41.93
4	43510001	RELEASE BEARING ALFETTA/ GIULIETTA, 75, 90, GTV 2.0 116	€57.98

Kupplungsbetätigung/Clutch Actuation Giulietta (116)



1	43812	OE. 60730497 CLUTCH CYLINDER WITH SCREWED RESERVOIR (116)	€83.95
2	43816	OE. 60518194 CLUTCH MASTER CYLINDER 116 1983>	€71.43
3	43817	OE. 60723874 CLUTCH CYLINDER WITH PLUG IN RESERVOIR (116)	€81.93
4	43816935	CLUTCH HOSE 116	€16.64
4	4380090	STEEL FLEX CLUTCH HOSE	€39.41
5	4389	OE. 60547341 CLUTCH SLEEVE CYL.	€54.62

Seitenwelle/Side Shaft Giulietta 1.3/1.6/1.8/2.0



1	*46220020*	*INNER/OUTER DRIVESHAFT JOINT 116 4-CYLINDER*	*€116.80*
2	*46326086*	*OE. 60729242 SIDE SHAFT BOOT SET inside/outside 116-4Cyl.*	*€25.00*

Federn/Springs

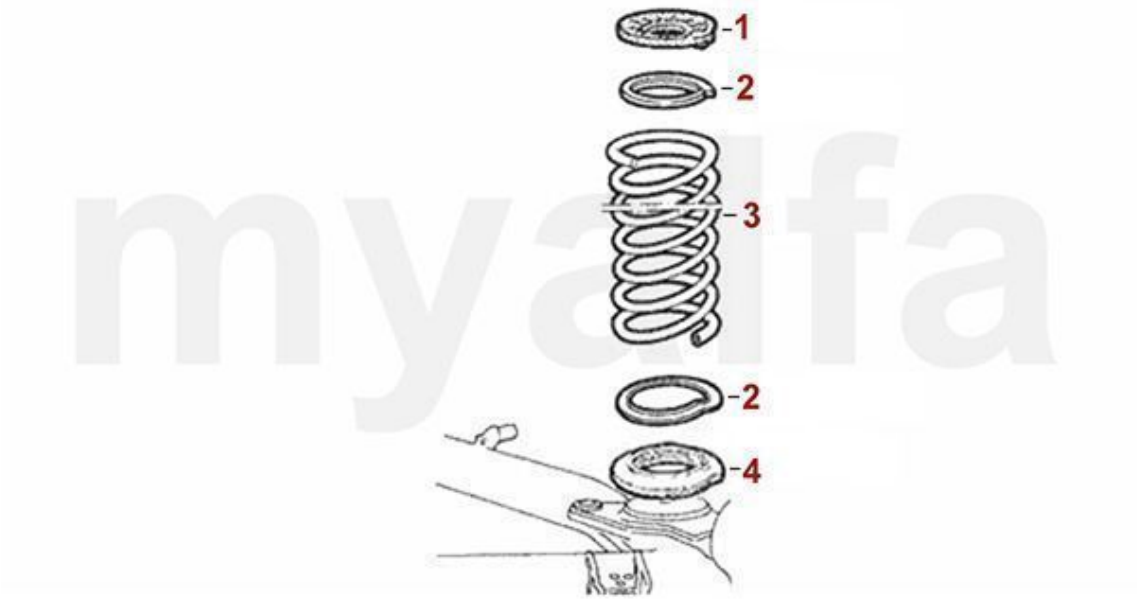

1	51921363	REAR SPRING UPPER RUBBER OE. 60521363	€15.97
2	51821362	METAL SEAT REAR SPRING LOWER / UPPER Alfetta / GT/V 4/6 / 75	€7.48
3	5164120	REAR SPORT SPRINGS 30 MM LOWER 75, GTV (116)	€193.19
4	51921364	REAR SPRING LOWER RUBBER OE. 60701036	€15.97

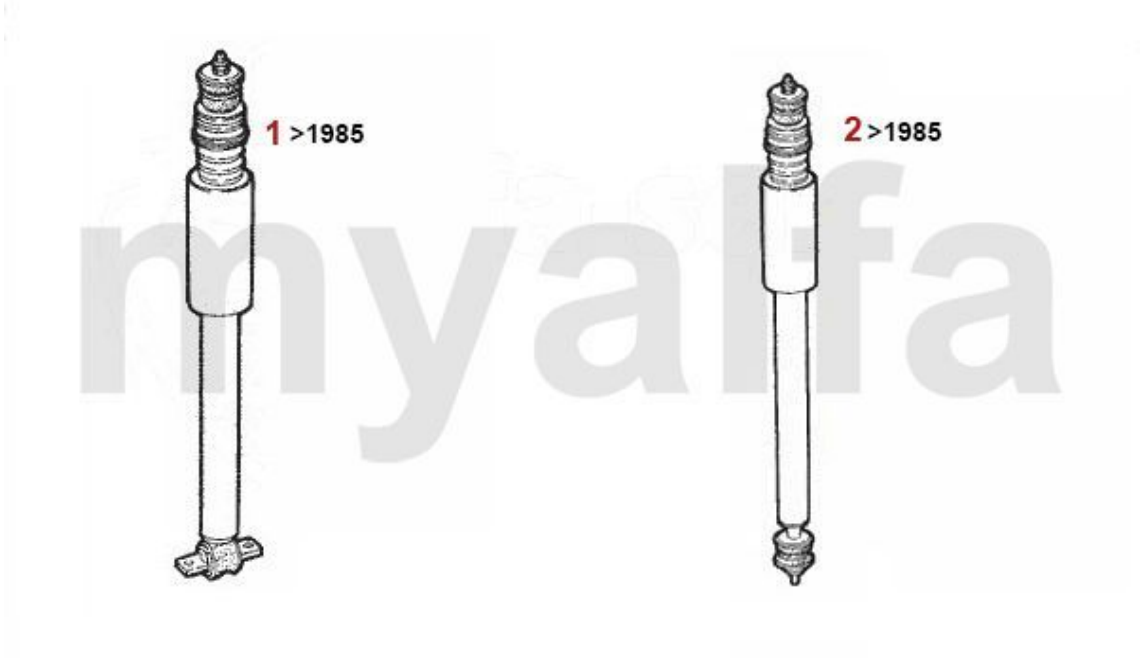

1	51112189	OE. 60730502 FRONT SHOCK ABSORBER	€91.60
1	5122241	FRONT KONI YELLOW 116 UNTIL 1985	€114.71
1	51260465	SHOCK ABSORBER BILSTEIN B6 FRONT ALFETTA,GTV6 (116)	€166.39
2	51112191	OE. 60730537 REAR SHOCK ABSORBER	€91.60
2	5122242	REAR KONI YELLOW 116 UNTIL 1985	€130.17
2	51260475	SHOCK ABSORBER BILSTEIN B6 REAR TILL 1985	€166.39

Aufhängung/Attachment Giulietta (116) vorne/front

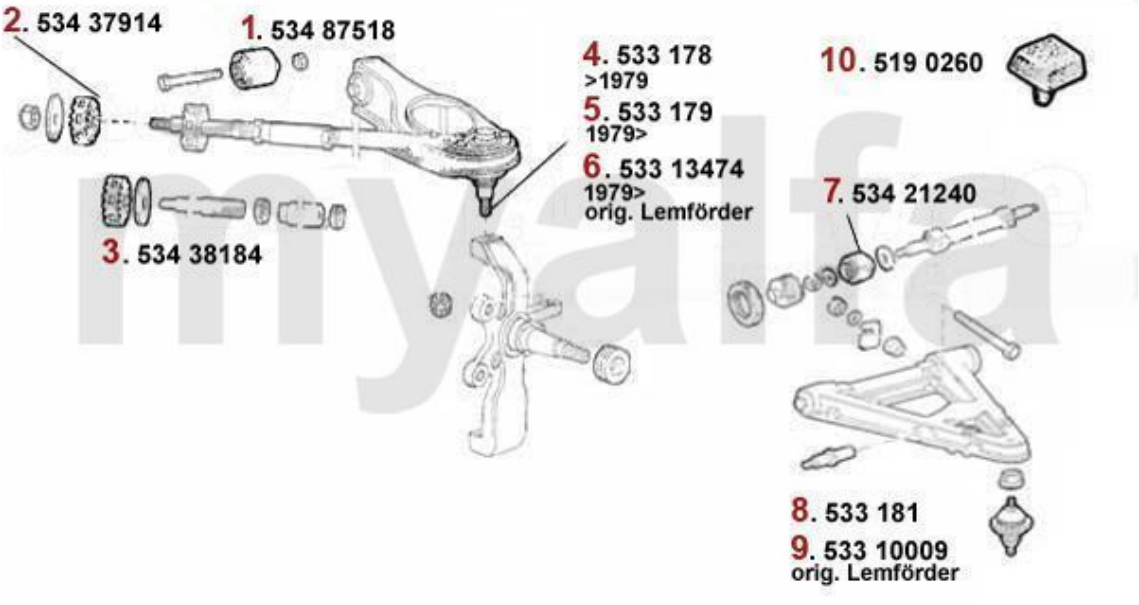

1	53487518	OE. 60521269 FRONT WISHBONE BUSH 75,GTV6 (116) RZ/SZ	€10.00
2	53437914	OE. 60521263 RUBBER 75, GTV6 (116)	€3.78
3	53438184	OE. 60521264 RUBBER 75, GTV6	€3.78
4	533178	OE.60521243 UPPER BALL JOINT 116	€32.77
5	533179	OE. 60728728 UPPER BALL JOINT 116	€37.73
6	53313474	OE. 60728429 Front upper ball joint LMI	On request
7	53421240	OE. 60521240 LOWER ARM BUSH 116 FA	€35.00
8	533181	OE. 60521236 LOWER BALL JOINT 116	€38.57
9	53310009	OE. 60521236/7 LOWER BALL JOINT LEMFÖRDER	On request
10	5190260	UPPER BUMP STOP 1969-93	€7.48

Aufhängung/Attachment Giulietta (116) hinten/rear

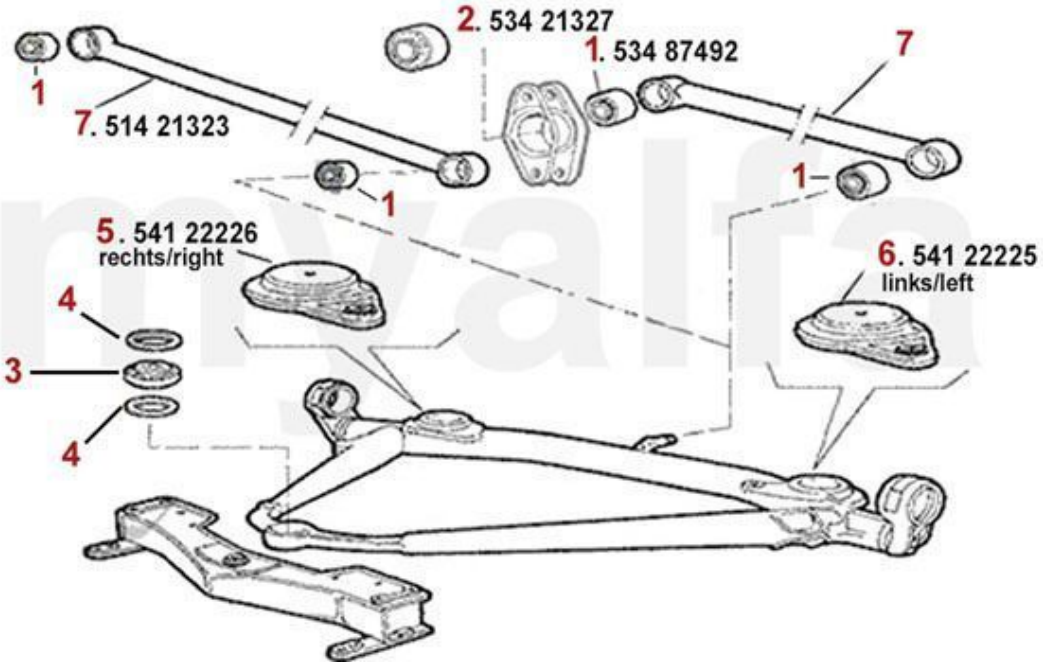

1	5341970	SET SUPERFLEX BUSHES 116 REAR AXLE TORSION BAR	€100.00
1	53487492	OE. 60521328 REAR AXLE MOUNT 75, Alfetta, Giulietta, GTV6, RZ/SZ	€8.07
2	53421327	OE. 60521327 BUSH	€14.71
3	53488248	OE. 60700773 FRONT BUSHING DEDION TRANSAXLE, 4-CYLINDER (NOT TWIN SPARK)	On request
3	5340100	FRONT DEDION BUSH 45mm, 4-CYLINDER (NOT TWIN SPARK), STRENGTHENED, SUPERFLEX	€48.32
4	53433966	OE. 60533966 RING f. PANHARD/GEAR 116	On request
5	54122226	OE. 60522226 MOUNT FOR REAR AXLE FRAME RIGHT SIDE, GTV6, 75	€73.95
6	54122225	OE. 60522225 MOUNT FOR REAR AXLE FRAME LEFT SIDE, GTV6, 75	€73.95
7	51421323	OE.60521323 TORSION BAR 116	On request

Stabilisator vorne/Stabilizer front Giulietta (116)

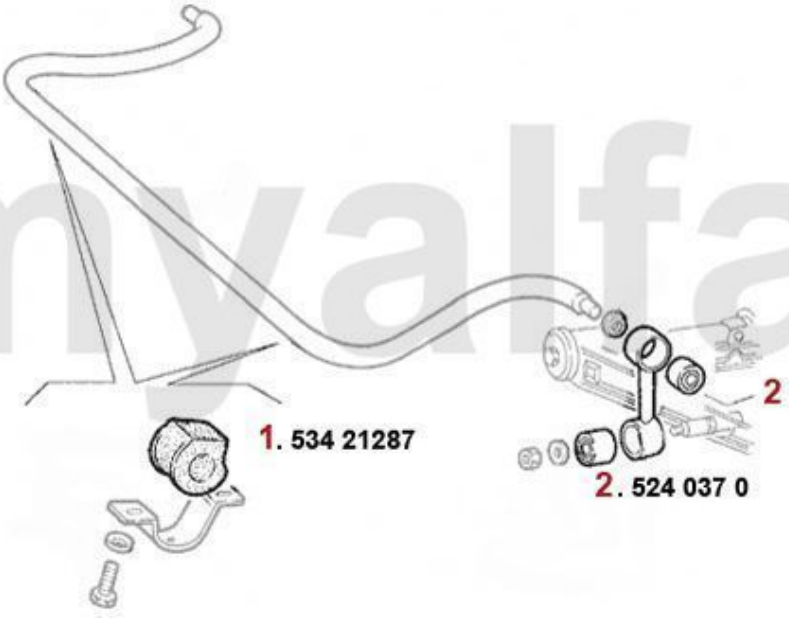

1	*53421287*	*ANTI ROLL BAR RUBBER FRONT SET (2) 22MM ALFETTA, GIULIETTA,GTV6, 75*	*€13.36*
2	*5240370*	*FRONT UPPER ANTI ROLL BAR DROP LINK BUSH 30 mm*	*€8.32*

Stabilisator hinten/Stabilizer rear Giulietta (116)

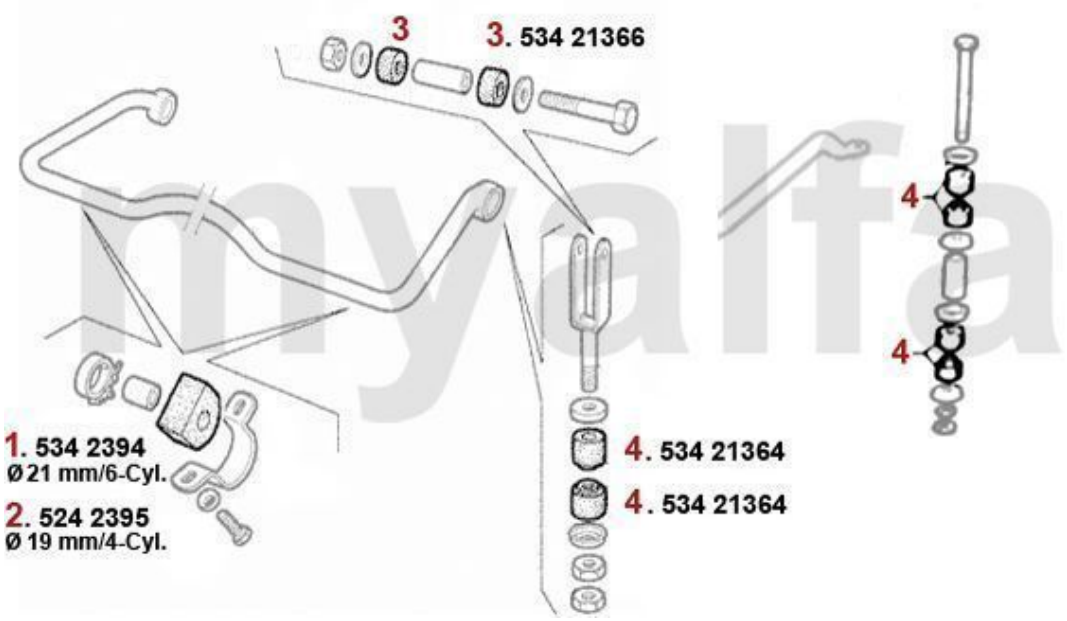

1	5342394	SET ANTI-ROLL BAR RUBBER REAR ALFETTA,GIULIETTA, 75 (21mm)	€24.79
2	5242395	SET ANTI-ROLL BAR RUBBER REAR 75 1.6-1.8 ie (19mm) SUPERFLEX	€22.27
3	53421366	OE. 60521366 STABILIZER BUSH 75 ,90, ALFETTA, GTV6 (116), GIULIETTA	€5.13
4	53421364	OE. 60521364 TIE ROD BUSH ALFETTA, GIULIETTA, GTV6 (116), 75	€3.28

Radlager/Wheel Bearing Giulietta (116)



1	544613	FRONT WHEEL BEARING SET ALFETTA/GT (116) 1.6 1977-2.80, 1.8/2.0/TD >2.80, GIULIETTA 1.3/1.6	€48.32
2	544614	FRONT WHEEL BEARING SET 116 FROM 1980 ON	€44.12
3	54417332	WHEEL BEARING SET REAR RIGHT 116 1981-85	€74.79
4	54417331	WHEEL BEARING SET REAR LEFT 116 ->(till) 1985	€74.79
5	5191160	OE. 60501960/60751855 GREASE CAP	€7.56

Lenkung/Steering Giulietta (116)



1	5541300	AXIAL BALL JOINT ALFETTA, GIULIETTA, GTV (116),75,90 - FOR SPICA, RIGHT HAND THREAD	€41.18
2	55413ZF	AXIAL KNUCKLE GTV6 FOR ZF STEERING VERION M12/M14	€41.18
3	554180	OE. 60521320 TIE ROD END ALFETTA, GTV6, GIULIETTA, 75, 90, RZ, SZ	€23.95
4	5552269	STERRING SLEEVE SPICA (116) LEFT	€29.33
5	5552270	STEERING SLEEVE SPICA 116 RIGHT	€21.01
6	55522911	OE. 60548920 STEERING BOOT SPICA 116 WITHOUT POWER STEERING, 29/37 mm	€17.56
7	5552291	OE. 9943860 STEERING BOOT ZF 116 WITH POWER STEERING	€18.99
8	55511600	STEERING BOOT SET UNIVERSAL	€27.31

Bremsscheiben/Brakedisks Giulietta (116)

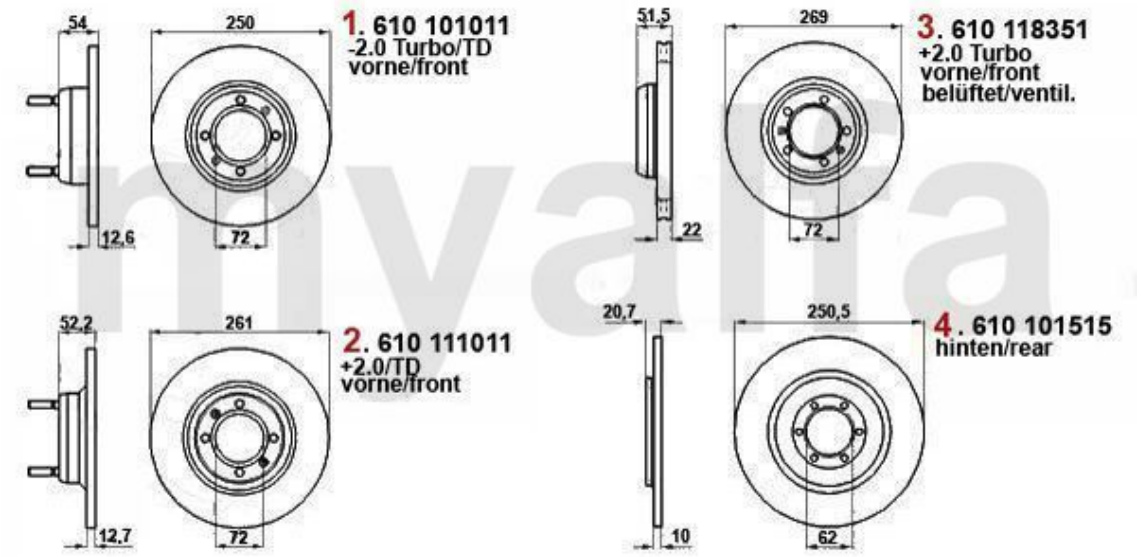

1	61001011	OE.60526087 FRONT BRAKE DISC GIULIETTA 1.3/ 1.6/ 1.8/TURBO,75 1.6/1.8/2.0/TD	€67.14
2	61011011	OE. 60533706 FRONT BRAKE DISK	€79.83
3	61018351	OE. 60522092 FRONT BRAKE DISC 75 VENTIL.	€75.00
4	61001515	OE. 60701786 REAR BRAKE DISK 116	€54.62

Bremsbeläge/Brakepads Giulietta (116)

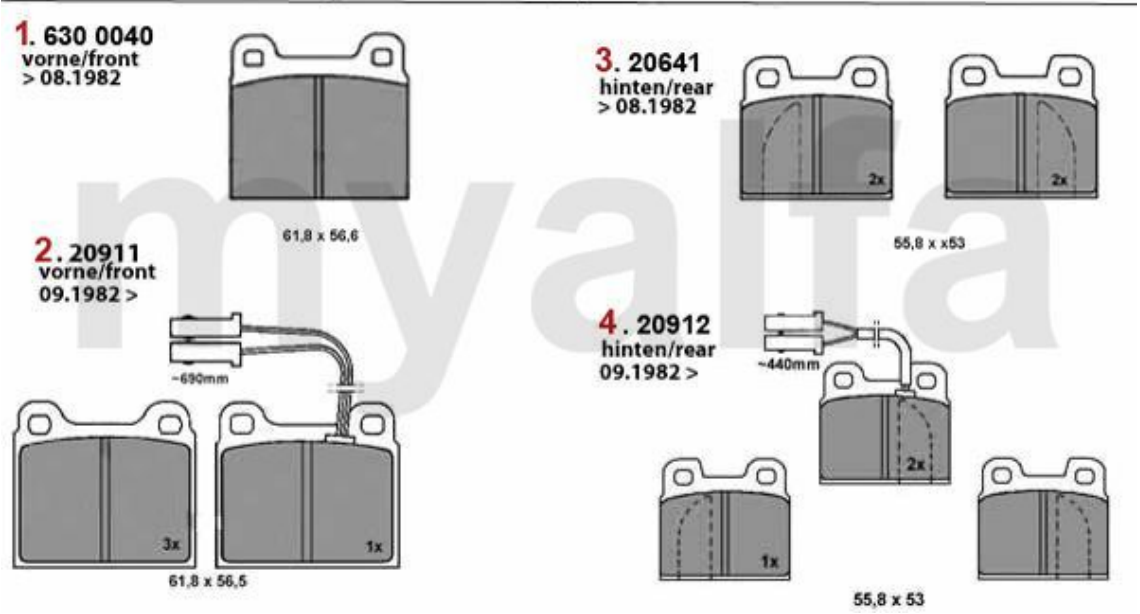

1	*6300040*	*BRAKE PADS 1300/1600 1966-85 FRONT*	*€20.92*
2	*20911150*	*OE. 60778257 FRONT BRAKE PADS*	*€82.77*
3	*20615004*	*OE.60727290 REAR BRAKE PADS ALFETTA, GIULIETTA, GTV (116) SYSTEM ATE*	*€41.93*
4	*20912150*	*OE. 60740845 REAR BRAKE PADS*	*€68.49*

Bremsbelag Zubehör/Brakepadattachment Giulietta (116)

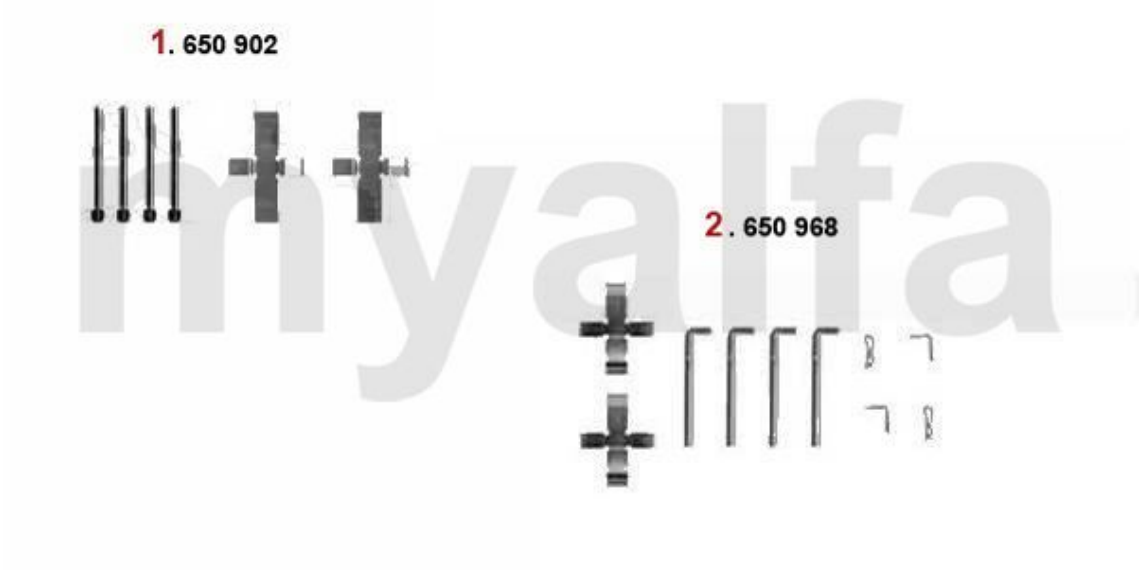

1	*650902*	*SBB-Zubehör für 1300400/20034 4x stift 2x kreuzfeder*	*€6.47*
2	*650968*	*BRAKE MOUNTING KIT 116 REAR BRAKE*	*€16.72*

Bremszangen/Calipers Giulietta (116)

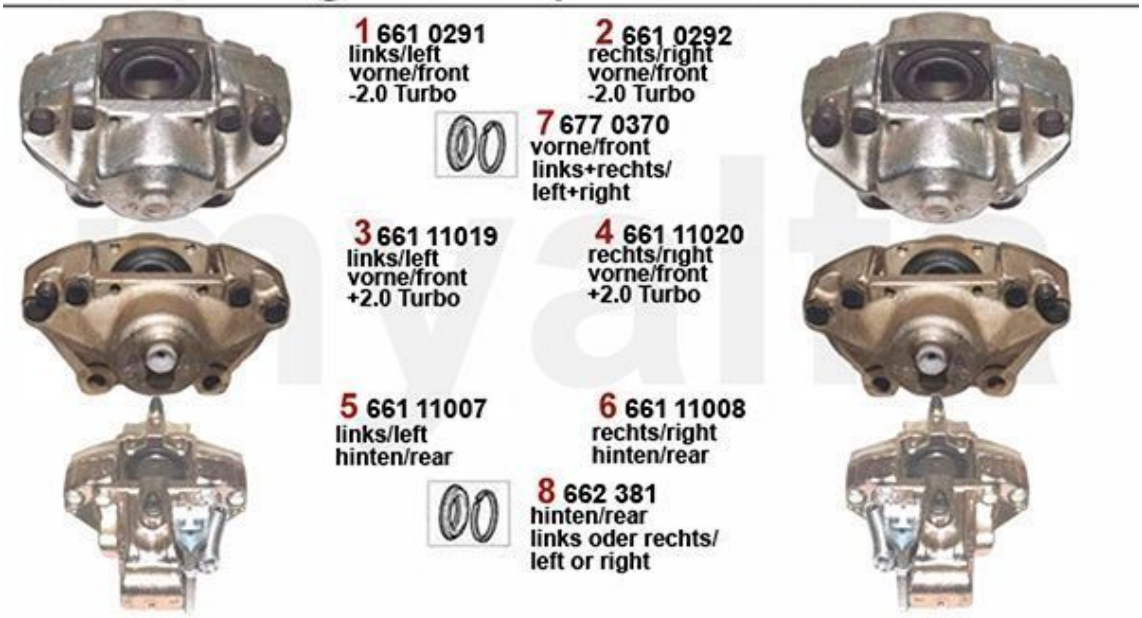

1	6610291	BRAKE CALIPER 1300-1600 1964-85 FRONT LEFT, SYSTEM ATE	€133.61
2	6610292	BRAKE CALIPER 1300-1600 1964-85 FRONT RIGHT, SYSTEM ATE	€133.61
3	66111019	BRAKE CALIPER OE. 60703991	€163.78
4	66111020	BRAKE CALIPER OE. 60734813	€163.78
5	66111007	OE. 60760085 BRAKE CALIPER REAR LEFT 116, SYSTEM: ATE	€184.03
6	66111008	OE. 60760086 BRAKE CALIPER REAR RIGHT 116, SYSTEM: ATE	€184.03
7	6770370	BRAKE CALIPER REBUILD KIT FRONT ATE	€18.99
8	662381	REPAIR KIT BRAKE CALIPER ATE ALFETTA, GIULIETTA, GTV6 (116), 75, 90	€43.61

BKV/Hauptbremszylinder/Brakeservo/Brake master cylinder Giuliatta (116)

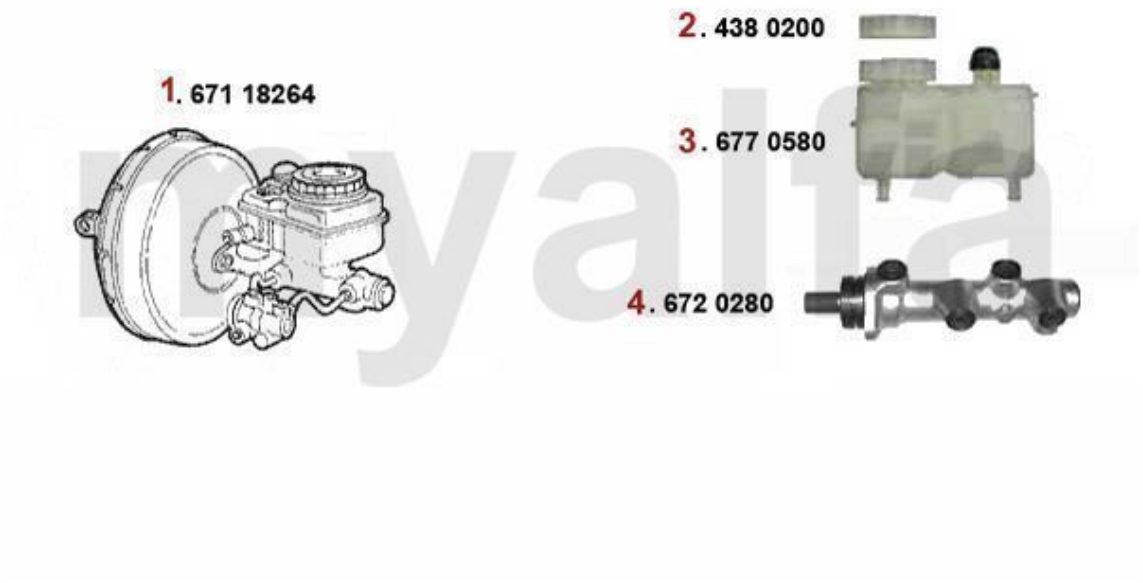

1	67118264	OE: 60518264 BRAKE BOOSTER BENDIX	€234.75
2	4380200	CAP BRAKE / CLUTCH RESERVIORE HANGING PEDALS	€11.34
3	6770580	BRAKE FLUID RESERVOIR HANGING PEDALS	On request
4	6720280	BRAKE MASTER CYLINDER HANGING PEDALS 20,6MM	€105.80
4	67245043	BRAKE MASTER CYLINDER ATE ORIG. HANGING PEDALS 20,6MM	€209.16

Bremskraftregler/Brake Valve Giulietta (116)



1	*674265*	*BRAKE VALVE 75,90,Giulietta,GT /V 2.0 (116)*	*€184.03*
2	*6740200*	*BRAKE PRESSURE REG. SYSTEM ATE*	*€197.48*
3	*6740220*	*BRAKE PRESSURE REG. BONALDI GIULIA, SPIDER; GT BERTONE; ALFETTA GTV4 (116) UNTIL 1984*	*€113.36*

Bremsschlauch/Brake Hose Giulietta (116)

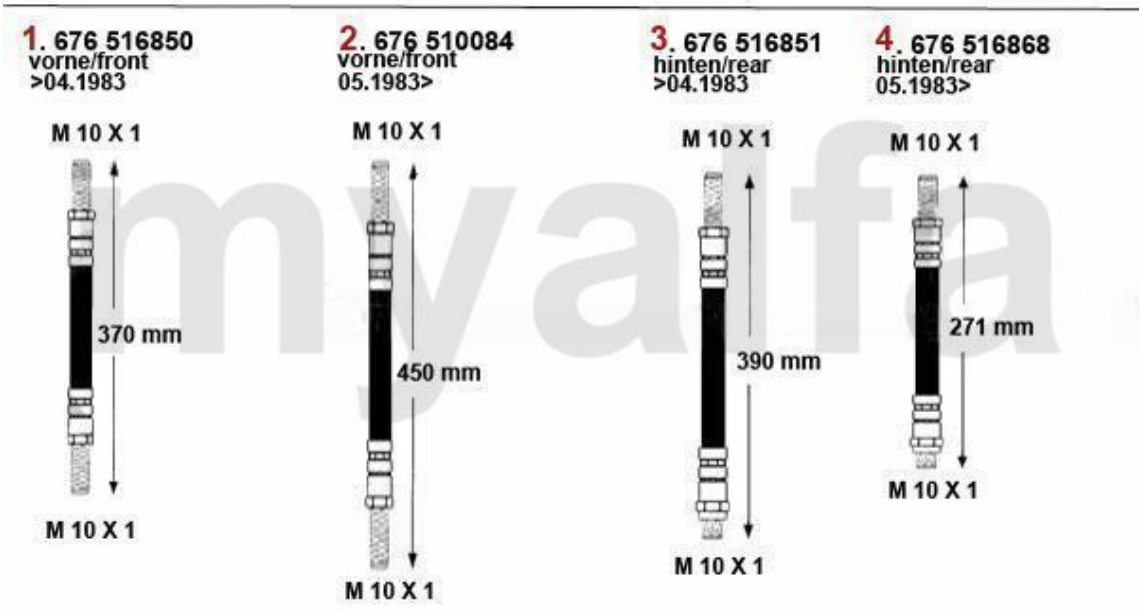

1	67616850	OE. 60727319 BRAKEHOSE 116 4-CYL. >1983	€22.27
2	67610084	OE. 71736935 BRAKE HOSE	€20.00
3	67616851	OE. 60728512 BRAKEHOSE REAR 116 > 1983	€22.27
4	67616868	OE. 60522547 REAR BRAKE HOSE GTV6 UNTIL 1981, GTV (916) 1.8 TS, 6	€18.99

Handbremsseil/Brake Cable Giulietta (116)

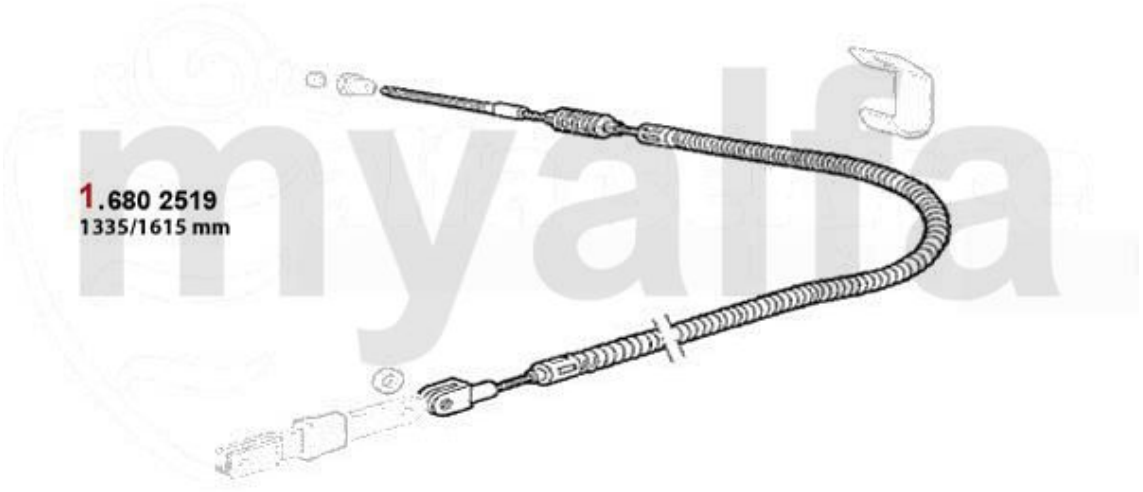

1	***6802519***	***OE. 60521838 BRAKE CABLE 116 1980>***	***€40.00***

Zündverteiler/Distributor Giulietta



1	8150280	POINTS 1968-89 BOSCH	€10.84
2	8160360	ROTOR ARM BOSCH, DISTRIBUTOR WITH POINTS, PLUGGED VERSION	€9.16
3	8170320	DISTRIBUTOR CAP 1974-93 BOSCH, NO CUT OUT	€10.00
4	8150730	CONDENSER 1974-93 BOSCH DISTRIBUTOR, SQUARE FITTING PLUG	€7.14
5	8150030	POINTS MARELLI	€10.84
6	8160070	ROTOR ARM MARELLI DISTRIBUTOR, WITH POINTS	€10.00
7	8160810	ROTOR ARM MARELLI DISTRIBUTOR, NO POINTS	€8.99
8	8170050	DISTRIBUTOR CAP MARELLI, FOR IGNITION WITH POINTS	€20.08
9	8170800	DISTRIBUTOR CAP MARELLI, NO POINTS	€16.76

Zündungsteile/Ignition Parts Giulietta



1	8120200	INGNITION COIL CARBURETTOR STANDARD	€33.53
1	8120210	IGNITION COIL CARBURETTOR MODEL ORIGINAL MAGNETI MARELLI	€61.26
2	8120420	INGNITION COIL CARBURETTOR HEAVY DUTY WITH RESISTOR	€99.08
3	81210	ELECTRONIC IGNITION COIL 33, 75 , 90, ARNA, SUD/SPRINT, ALFETTA, GIULIETTA >1986 SYSTEM: MARELLI	On request
4	81811202	IGNITION WIRE SET ALFETTA/GTV (116)	€36.05
5	BA2HL	SPARK PLUG "myalfa" 2HL	€7.48
6	BP6ES	OE. 71736278 SPARK PLUG NGK	€4.12
7	BP6ET	SPARK PLUG NGK WITH 3 ELECTRODES 155 2.0 16V TURBO	€6.47

Aggregate/Aggregats Giulietta (116)



1	8220170	STARTER MOTOR 9 TEETH 1971-89	€175.63
1	8220080	STARTER 8 TEETH, 1,4 KW NEW PART! LIGHTER VERSION	€175.63
2	82210680	STARTER ALFETTA,GIULIETTA GTV(116)	€167.23
3	82214960	STARTER MOTOR 9 TOOTH	€184.03
3	82214965	BOSCH STARTER MOTOR, 9 TEETH	On request
4	8210180	ALTERNATOR 65A EXTERNAL REGULATOR	€184.79
6	8230700	EXTERNAL REGULATOR ALTERNATOR 12V	€27.31
6	8230710	EXTERNAL REGULATOR ALTERNATOR 12V HELLA	€33.19



1	8111027	IGNITION LOCK ALFETTA/GIULIETTA/SUD SPRINT 1983>, 33 (905)	On request
1	8110680	IGNITION SWITCH SPIDER 1979-93, 4 CABLES, ALFETTA, GIULIETTA UNTIL 1983, GTV6 (116)	€150.42

Car Cover Giulietta (116)

1. 911 108 0
blau/blue

2. 911 274 0
rot/red





1	*9111080*	*CAR COVER ECOLINE GIULIA, RED*	*€49.58*

1	9822260	BATTERY CHARGER AB-4 ABSAAR	€33.53
2	9822250	BATTERY LIFE SAFER	€32.35
3	8701130	BATTERY SWITCH / MASS POLE CLAMP	€8.32

0	*9850040*	*FENDER PROTECTOR MYALFAGROUP*	*€33.53*