ALFA MONTREAL

All prices including tax, delivery costs are extra

Table Of Content

BODY 4
- GLAZING 5
  - MIRROR 6
  - LIGHTING 7
  - BODY PARTS FRONT 8
  - BODY PARTS MIDDLE 9
  - BODY PARTS REAR 10
  - DOOR MECHANICAL 11
  - BUMPER/FRONTGRILLE 12
  - LETTERS/EMBLEM 13
  - RUBBER GASKETS 14
  - FILLER NECK RUBBER 15
  - CAR COVER 16
  - INSULATING MATS 17
- INTERIOR PARTS 18
  - ROOF TRIM 18
    - CARPET SET 19
    - FLOOR MATS 20
    - TRUNK CARPET 21
    - SEAT COVER 22
    - DASH BOARD 23
    - CENTER CONSOLE 24
    - DOOR TRIM PANELS 25
  - TYPE PLATES 26
- ENGINE 27
  - V-BELTS 28
- ENGINE GASKEKTS 29
  - HEAD SET 29
    - FULL SET 30
    - GASKETS ENGINE 31
    - CRANKSHAFT SEALS 32
    - REINZ UNIVERSAL 33
- COOLING SYSTEM 34
  - THERMOSTAT 34
    - WATERPUMP 35
    - RADIATOR 36
    - RADIATOR HOSES 37
  - FUEL SYSTEM 38
  - ENGINEMOUNT 39
  - VALVE GEAR 40
  - PISTONS/BEARINGS 41
- EXHAUST SYSTEM 42
- FILTER 43

DRIVETRAIN 44
- GEARBOX 44

GEARBOX MOUNT 44
CLUTCH 45
CLUTCH ACTUATION 46
PROP SHAFT 47
DIFFERENTIAL 48
SUSPENSION 49
SPRINGS 49
SHOCK ABSORBER 50
ATTACHMENT FRONT 51
ATTACHMENT REAR 52
STABILIZER FRONT 53
STABILIZER REAR 54
WHEEL BEARING SET 55
WHEELS 56
BRAKE SYSTEM 57
BRAKE DISCS 57
CALIPER FRONT 58
CALIPER REAR 59
BRAKE PADS 60
BRAKE SERVO/BRAKE MASTER CYLINDER 61
BRAKE HOSES/BRAKE VALVE 62
HANDBRAKE 63
ELECTRIC 64
IGNITION 64
STARTER/ALTERNATOR 65
SWITCHES 66
SENSOR 67
INSTALLATION MATERIAL 68
Controle lampjes 69
WIRING HARNESS 70
STEERING 71
WIPER 72
MISCELLANEOUS 73
JACK 73
CAR COVER 74
BATTERY CHARGERS 75
FENDER PROTECTOR 76

1	*1510080*	*OUTER HEADLIGHT H1 CARELLO WITH PARKING LIGHT (136mm) MONTREAL/ZAGATO JUNIOR, YELLOW*	*€72.23*

Verglasung/Glazing Montreal

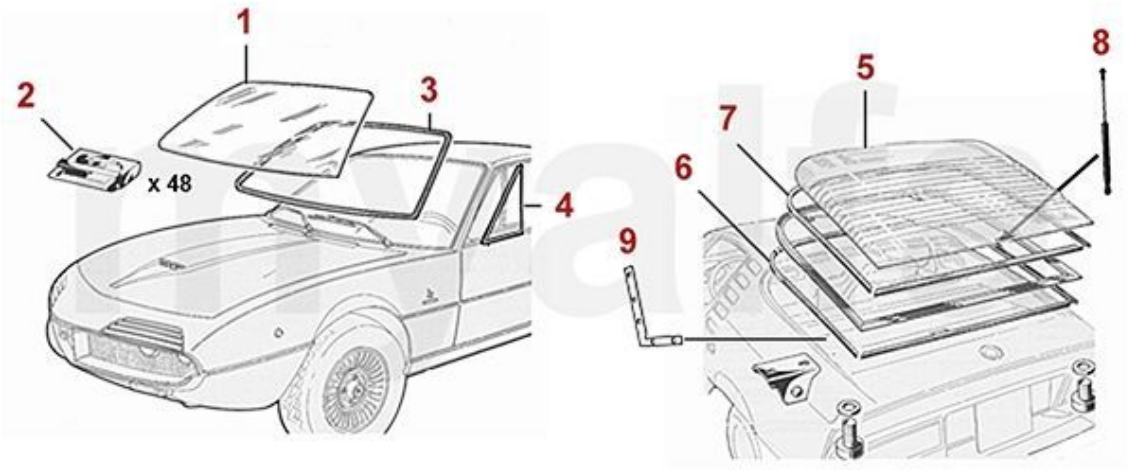

1	1346460	FRONT SCREEN MONTREAL GREEN	€503.36
2	1630010	FRONT SCREEN CHROME TRIM RETAINING CLIP MONTREAL	€5.04
3	1616470	FRONT SCREEN RUBBER SEAL MONTREAL	€360.50
4	1610501	SEAL FOR QUARTERLIGHT MONTREAL LEFT SIDE	€264.71
4	1610502	SEAL FOR QUARTERLIGHT MONTREAL RIGHT SIDE	€264.71
5	1346470	REAR SCREEN MONTREAL GREEN	€823.53
6	1613080	REAR SCREEN SEAL MONTREAL AT THE BODY	€268.07
7	1613070	REAR SCREEN SEAL MONTREAL AT THE REAR SCREEN	€217.65
8	1186450	SET REAR HATCH STRUTS MONTREAL	€147.06
9	1330110	MOUNTING BRACKETS SET FOR REAR WINDOW FRAME MONTREAL	€25.04

Außenspiegel/Mirror Montreal



1	*1400170*	*DOOR MIRROR CHROME ROUND ALFA BADGE INCLUDING RUBBER PAD*	*€44.45*
2	*1631700*	*RUBBER PAD ROUND DOOR MIRROR*	*€5.29*

Beleuchtung/Lightning Montreal



1	1516410	OUTER HEADLIGHT H1 CARELLO WITHOUT PARKING LIGHT (136mm) MONTREAL / ZAGATO JUNIOR	€63.78
1	1516400	OUTER HEADLIGHT H1 CARELLO WITH PARKING LIGHT (136mm) MONTREAL / ZAGATO JUNIOR	€63.78
2	1516420	INNER HEADLIGHT H1 CARELLO (136mm) 102/106 SPRINT, BERLINA, 106 SPIDER / MONTREAL / ZAGATO JUNIOR	€58.74
2	1510060	INNER HEADLIGHT CARELLO 102/106 SPRINT, 106 SPIDER, MONTREAL, ZAGATO, YELLOW	€66.39
3	1590101	VACUUM CAN BONALDI HEADLIGHT COVER MONTREAL LEFT NEW	€327.73
3	1590102	VACUUM CAN BONALDI HEADLIGHT COVER MONTREAL RIGHT NEW	€327.73
4	1546420	INDICATOR MONTREAL FRONT	On request
5	1550510	INDICATOR REPEATOR GT BERTONE / SPIDER ROUND	€15.88
6	1570140	LIGHT UNDER BONNET/TRUNK/ GLOVE BOX	€14.20
7	1586450	SET REAR LIGHT LENSES MONTREAL MONTREAL CARELLO 6 PIECES	€415.97
8	1596460	REAR LIGHT GLASS SEALS (SET) MONTREAL	€55.38
9	1596450	SET REAR LIGHT SEALS MONTREAL	€61.26

Karosserieteile vorne/Body Parts front Montreal

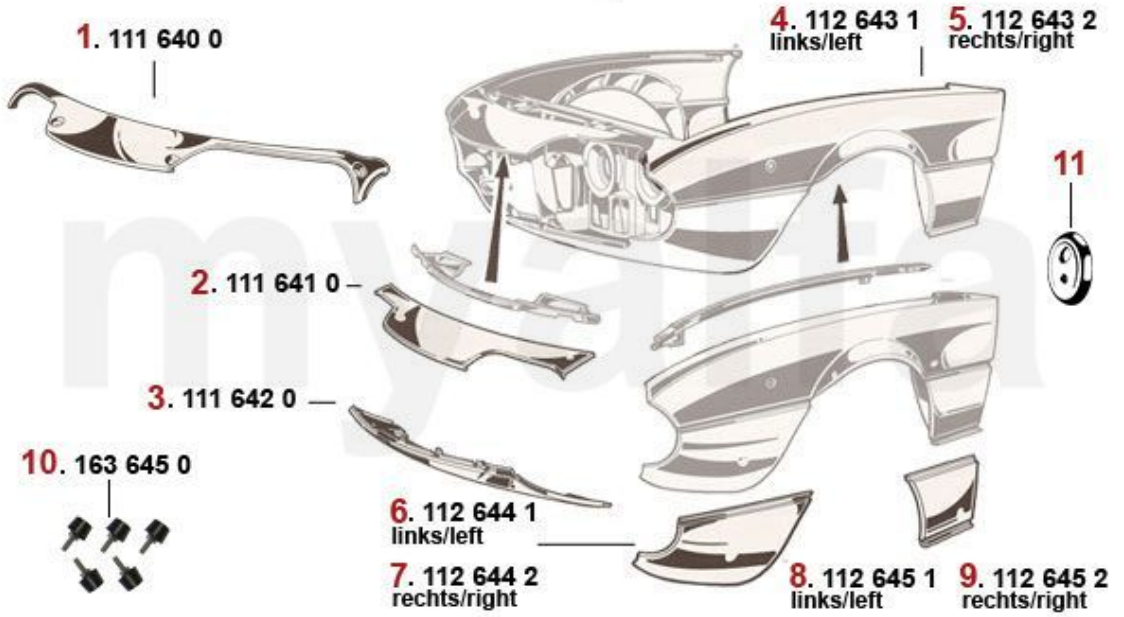

1	1116400	INNER SUPPORT PANEL FOR FRONT PANEL MONTREAL	On request
2	1116410	UPPER FRONT PANEL MONTREAL	€752.86
3	1116420	FRONT VALANCE MONTREAL	€714.20
4	1126431	UPPER FRONT WING SECTION MONTREAL LEFT	On request
5	1126432	UPPER FRONT WING SECTION MONTREAL RIGHT	On request
6	1126441	LOWER FRONT WING SECTION MONTREAL FRONT LEFT	€344.45
7	1126442	LOWER FRONT WING SECTION MONTREAL FRONT RIGHT	€344.45
8	1126451	LOWER FRONT WING SECTION MONTREAL REAR LEFT	€361.26
9	1126452	LOWER FRONT WING SECTION MONTREAL REAR RIGHT	€361.26
10	1636450	SET BONNET STOPS MONTREAL 4 PIECES	€108.40
11	1631450	OVAL GROMMET FOR HARNESS MONTREAL, 2 HOLES	€9.66

Karosserieteile Mitte/Body Parts middle Montreal

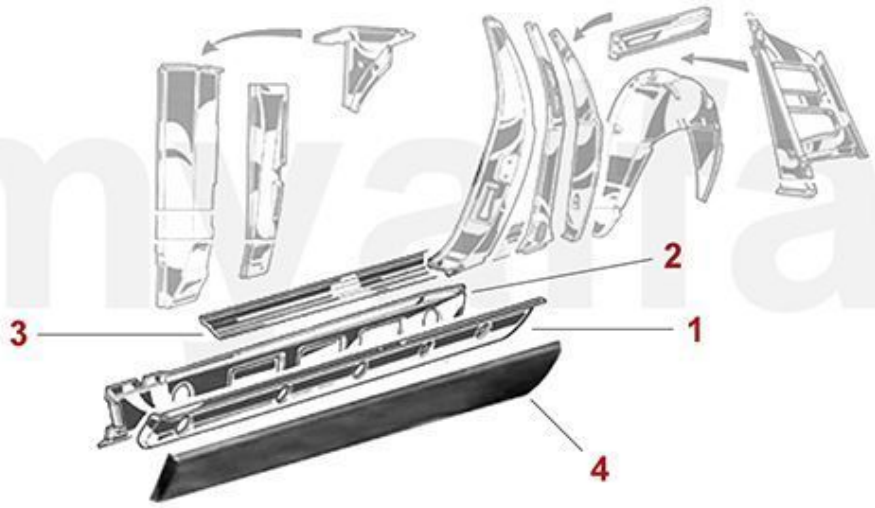

1	1166461	OUTER SILL MONTREAL LEFT	€352.86
1	1166462	OUTER SILL MONTREAL RIGHT	€352.86
2	1166451	MIDDLE SILL MONTREAL LEFT	€217.65
2	1166452	MIDDLE SILL MONTREAL RIGHT	€217.65
3	1166471	TOP SILL PANEL MONTREAL LEFT	€192.44
3	1166472	TOP SILL PANEL MONTREAL RIGHT	€192.44
4	1196441	LEFT OUTER SILL TRIM MONTREAL	€365.55
4	1196442	RIGHT OUTER SILL TRIM MONTREAL	€365.55

Karosserieteile hinten/Body Parts rear Montreal



1	1206471	REPAIR PANEL REAR WING MONTREAL REAR LEFT	€344.45
2	1206472	REPAIR PANEL REAR WING REAR RIGHT	€344.45
3	1206481	REPAIR PANEL REAR WING FRONT LEFT	€326.89
4	1206482	REPAIR PANEL REAR WING FRONT RIGHT	€326.89

Türmechanik/Door Mechanical Montreal

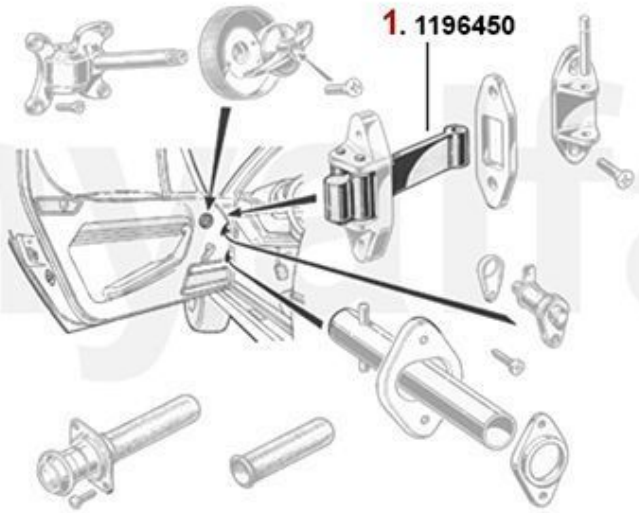

1	1196450	DOOR RETAINING STRAP MONTREAL (SET FOR 1 SIDE)	€75.55
2	1176470	SET (2) OUTTER DOOR HANDELS 116 GT/GTV, MONTREAL	€301.68

Stoßstangen/Bumpers Montreal

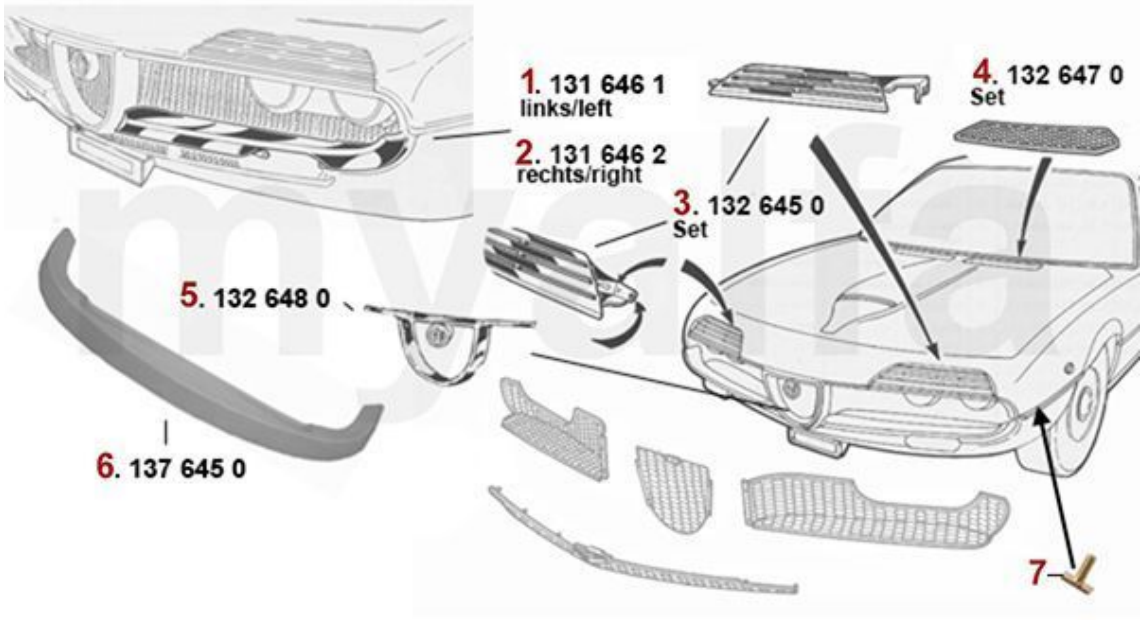

1	1316461	BUMPER MONTREAL FRONT LEFT	On request
2	1316462	BUMPER MONTREAL FRONT RIGHT	On request
3	1326450	SET HEADLIGHT COVERS MONTREAL	€831.93
4	1326470	SET SCUTTLE GRIDS MONTREAL	€209.24
4	1326490	VENTILATION MESH/WIPER PANEL (SET) MONTREAL, METAL	€277.23
5	1326480	CENTER HEART MONTREAL	On request
6	1376450	FRONT SPOILER MONTREAL	€248.66
7	1330030	CLIP FOR TRIM MONTREAL	€1.60

Schriftzüge-Embleme/Lettering Montreal



1	1360010	BADGE 55 mm Alfa Romeo	€25.17
2	1360020	BADGE 55 mm Alfa Romeo MILANO	€25.17
3	1360030	BADGE 55mm "ALFA ROMEO MILANO" ENAMEL	€33.57
4	1360500	BADGE ALUMINIUM WHEEL BLACK / SILVER BACKGROUND 48 mm	€6.64
5	1360510	CIRCLIP BADGE ALUMINIUM WHEEL 48 mm	€3.11
6	1366450	BASE FOR REAR BADGE MONTREAL	€75.55
7	1366460	BADGE "b" BERTONE MONTREAL INCLUDING RUBBER PAD	€71.43
8	1366470	BADGE "Torino" MONTREAL ENAMEL	€49.58
9	1360300	SCRIPT "ALFA ROMEO" MONTREAL	€192.44

Dichtgummis/Rubber Gaskets Montreal

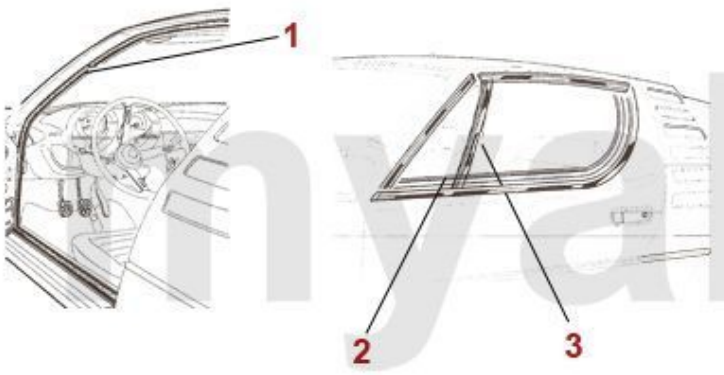

1	1616500	SET DOOR SEALS MONTREAL	€134.45
2	1616510	SET HORIZONTAL WEATHER STRIPS MONTREAL	€69.33
3	1616450	SET DOOR GLASS CHANNEL SEALS MONTREAL	€66.81

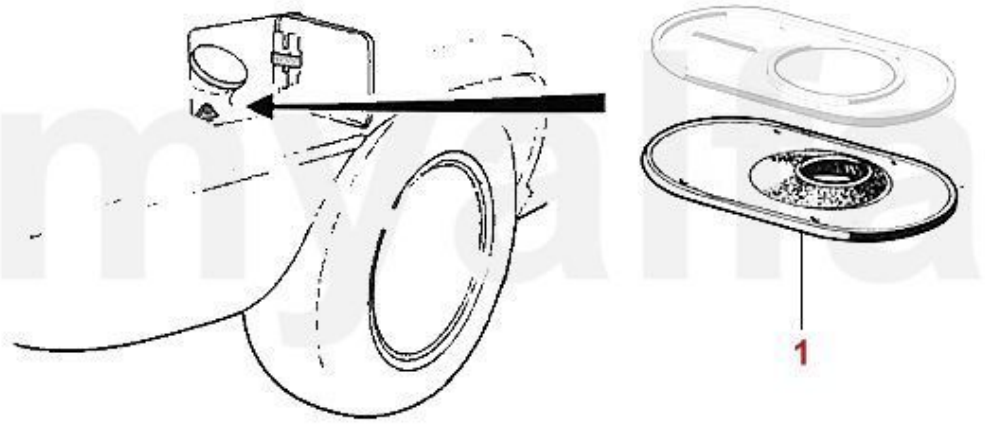

1	*1630050*	*OE. 105645225201 GROMMET MONTREAL*	*€41.93*



1	9111180	CARCOVER MADE TO MEASURE ALFA ROMEO MONTREAL WITH BADGE, RED	€142.02
2	9116460	CAR COVER ALFA ROMEO MONTREAL, RED	€100.00
2	9116470	CAR COVER ALFA ROMEO MONTREAL, BLUE	€100.00
2	9116480	CAR COVER ALFA ROMEO MONTREAL, GREEN	€100.00
2	9116490	CAR COVER ALFA ROMEO MONTREAL, BLACK	€100.00
2	9116500	CAR COVER ALFA ROMEO MONTREAL, WHITE (911802 M W)	€100.00

Dämmmatten/Insulating Mats





1	*9702350*	*INSULATING MAT ORIGINAL MATERIAL 50 x 100 cm*	*€21.09*

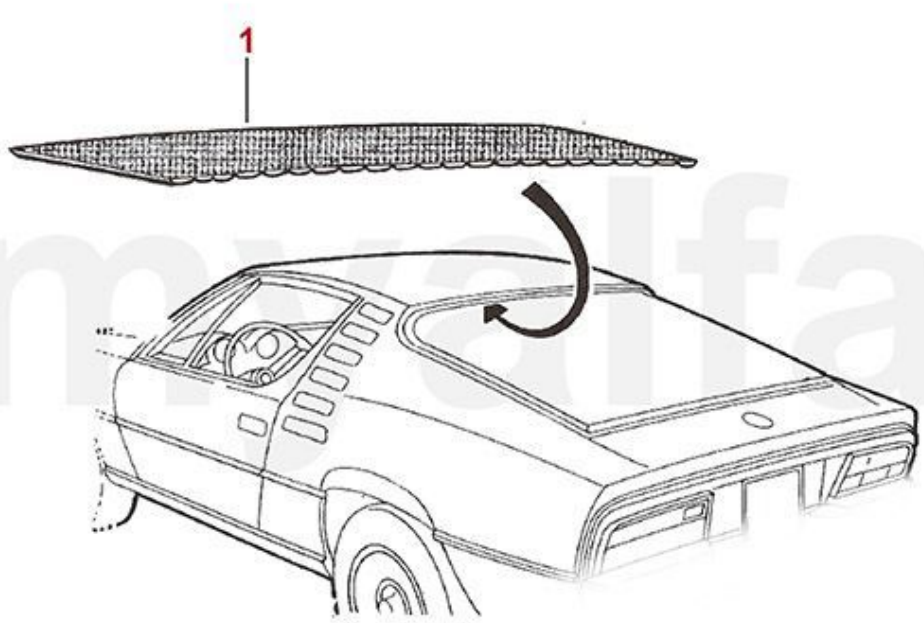

1	1756460	HEADLINING MONTREAL CREME	€273.11
1	1756470	HEADLINING MONTREAL BLACK	€273.11

Teppichsatz/Carpet Set Montreal

1. 171 641 1 Velours schwarz/ velours black

2. 171 641 2 Velours grau/ velours grey

3. 171 641 3 Velours hellbeige/ velours pale beige

4. 171 641 4 Velours dunkelblau/ Velours dark blue

5. 171 642 5 Feinvelours bordeaux/ softvelours bordeaux



1	1716411	CARPET SET MONTREAL VELOURS BLACK	€491.60
2	1716412	CARPET SET MONTREAL VELOURS GRAY	€378.15
3	1716413	CARPET SET MONTREAL VELOURS LIGHT BEIGE	€427.73
4	1716414	CARPET SET MONTREAL VELOURS DARK BLUE	€449.58
5	1716425	CARPET SET MONTREAL VELOURS BORDEAUX	€427.73
6	1736450	GEAR LEVER GAITER MONTREAL LEATHER BLACK	€50.34
6	1736460	GEAR LEVER GAITER MONTREAL LEATHER BEIGE	€50.34
7	1766460	HANDBRAKE GAITER MONTREAL LEATHER BLACK	€65.97
7	1766470	HANDBRAKE LEVER GAITER MONTREAL SCAY BEIGE	€32.35



1	*1722780*	*SET FLOOR MATS MONTREAL VELOURS BLACK*	*€79.83*

Kofferraumteppich/Trunk Carpet Montreal

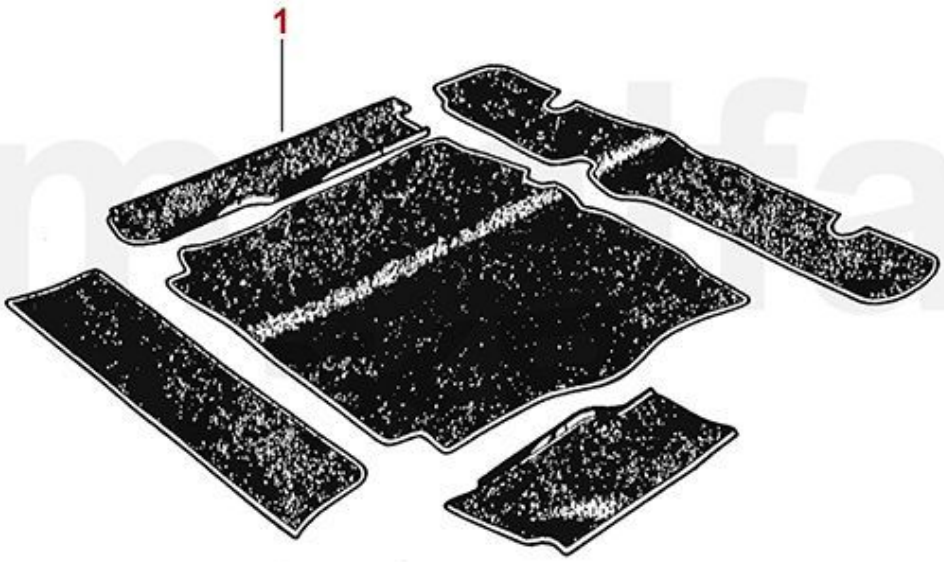

1	1716430	BOOT CARPET SET MONTREAL VELOURS BLACK	€284.87
1	1716450	TRUNK CARPET SET MONTREAL VELOURS BLUE 129	€360.50
1	1716460	TRUNK CARPET SET MONTREAL VELOURS BORDEAUX 158	€268.07
1	1716470	TRUNK CARPET SET MONTREAL VELOURS GREY 126	€268.07
1	1716480	TRUNK CARPET SET MONTREAL VELOURS BRIGHT BEIGE 118	€298.32

Sitzbezüge/Seat Cover Montreal



1	1706410	SEAT COVER MONTREAL FRONT VINYL SKAI BLACK	€302.52
1	1706420	SEAT COVER MONTREAL FRONT VINYL SKAI BLACK / CLOTH GRAY	€343.70
1	1706430	SEAT COVER MONTREAL FRONT LEATHER BLACK	€1,478.15
1	1706440	SEAT COVER MONTREAL FRONT VINYL SKAI BLACK / CLOTH BLACK	€397.39
1	1706450	FRONT SEAT COVER MONTREAL LEATHER/FABRIC BLUE 889+666	€1,592.44
1	1706460	FRONT SEAT COVER MONTREAL LEATHER/FABRIC BLACK	€584.04
2	1760110	SET COVERS FOR HEADREST ADJUSTMENT MONTREAL	€66.39
3	1760100	SET SEATBELT GUIDES MONTREAL	€37.73

Armaturenbrett/Dash Board Montreal



1	1781430	SET HORN BUTTON SURROUND 53 mm, HELLEBORE, 3 PIECES	€12.52
2	1731390	HEATER FASCIA PANEL CHROME GT BERTONE	On request
3	1736410	UPPER FASCIA CONSOLE MONTREAL	€197.48
4	1736420	FACIA GEAR CONSOLE MONTREAL	€217.65
5	1736430	RADIO BLANKING PLATE MONTREAL	On request
6	1781050	SHIFT KNOB WOOD MAHOGANY RED WITH BIG BADGE	€57.98
7	1780630	SHIFT KNOB WOOD WITH SMALL BADGE	On request
8	1780140	GEAR-SHIFT KNOB - wood ERGONOMIC without emblem	On request

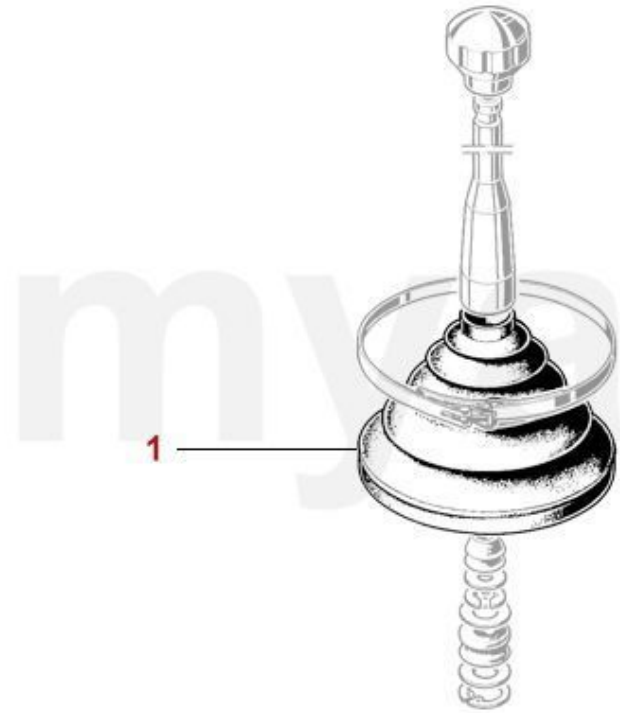

1	*4130080*	*GEARSTICK GAITER MONTREAL*	*€75.00*

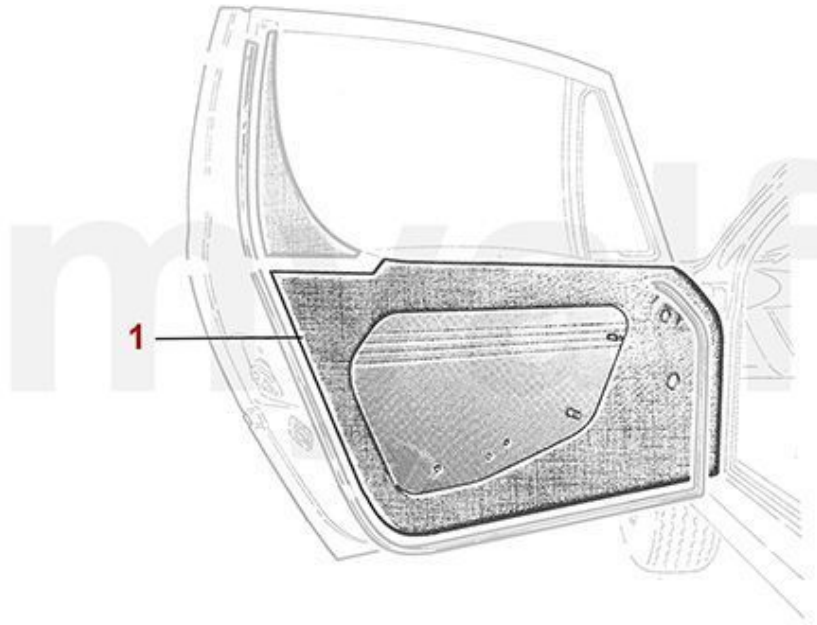

1	*1745460*	*SET INNER DOOR TRIM PANELS MONTREAL BLACK*	*€1,217.65*

1	*9300580*	*BODY VIN PLATE (BLANK)*	*€18.40*
1	*9300590*	*BODY TYPE PLATE MONTREAL, 105.64*	*€19.24*

1	*2426480*	*SET SLIDE RAILS MONTREAL, LEFTAND RIGHT, ORIGINAL QUALITY METAL VERSION*	*€247.90*

Keilriemen/V-Belts Montreal

1. 270 10775
Generator
9,5/10 x 775

2. 270 10990
Servolenkung/
Powersteering
9,5/10 x 990

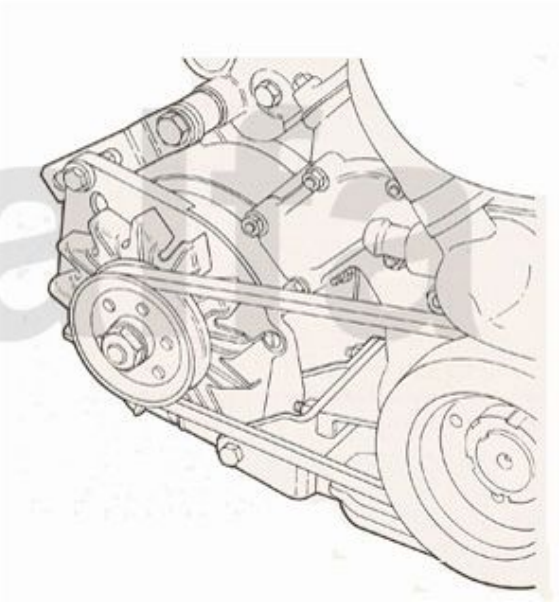

1	*27010775*	*V-BELT ALTERNATOR MONTREAL, 9,5 x 775*	*€13.11*
2	*27010990*	*V-BELT POWER STEERING MONTREAL, 9,5 x 990*	*€13.36*

Kopfdichtsatz/Head Set Montreal

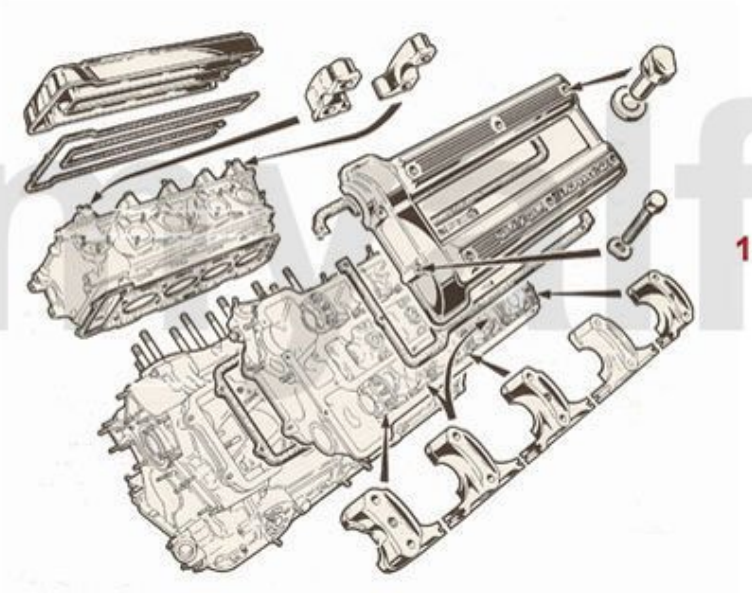

1	*2326450*	*HEAD OVERHAUL SET MONTREAL WITH HEAD GASKETS*	*On request*

Motordichtsatz/Full Set Montreal

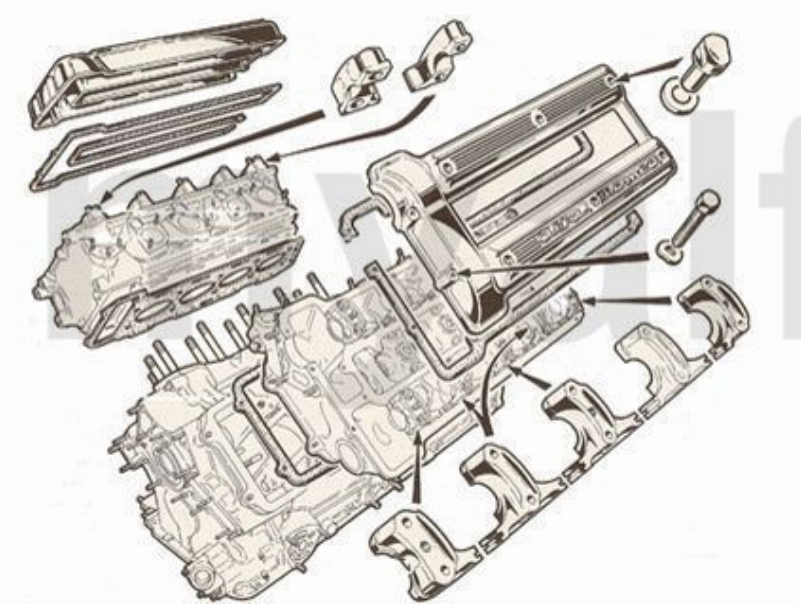

1	*2316460*	*FULL ENGINE GASKET SET MONTREAL WITH HEAD GASKETS LESS OIL SEALS*	*€248.66*

Dichtungen Motor/Gaskets Engine Montreal

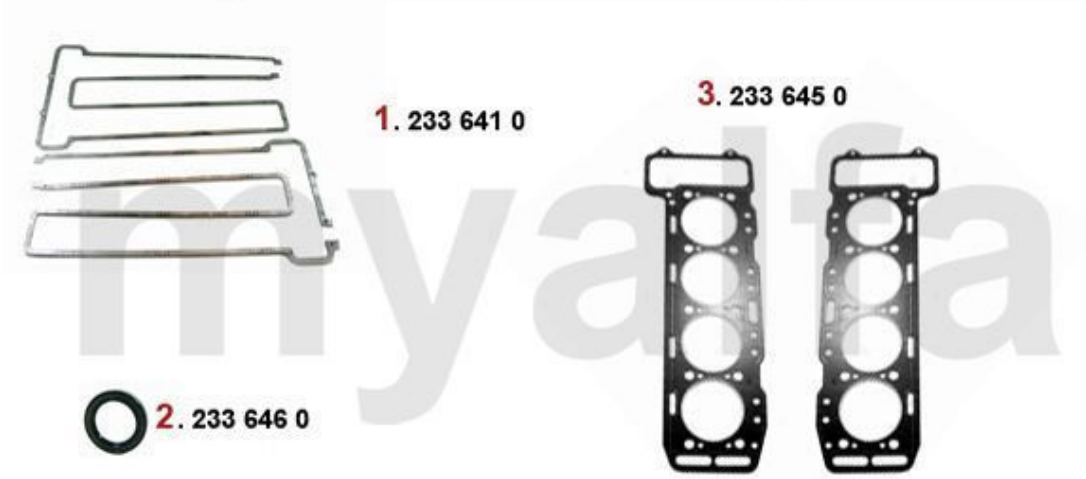

1	2336410	SET CAM COVER GASKETS MONTREAL	€61.01
2	2336450	SET HEAD GASKETS MONTREAL ELRING	€327.65
3	2336400	RUBBER BLOCK MONTREAL VALVE COVER GASKET	€7.48

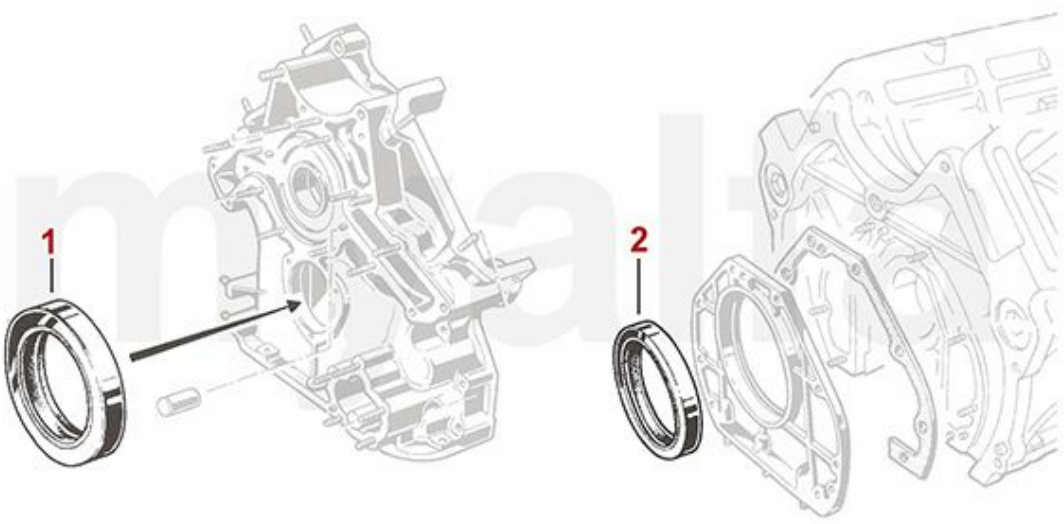

1	2336460	OIL SEAL CRANK SHAFT MONTREAL FRONT	€23.11
2	2330230	OIL SEAL CRANK SHAFT REAR 82/105/12 750/101/105/115/116 UP TO 1989, OEM QUALITY	€27.65

0	*2333490*	*XXL UNIVERSAL KIT FOR DIY GASKET MADE BY REINZ*	*€29.41*

Thermostat Montreal

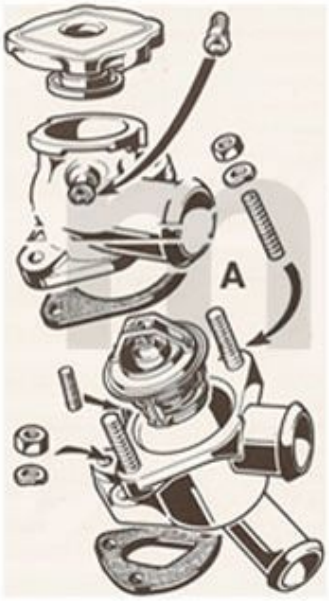



1. 263 005 0

1	*2630050*	*THERMOSTAT MONTREAL 79 DEGREE CELSIUS*	*€35.21*

Wasserpumpe/Waterpump Montreal

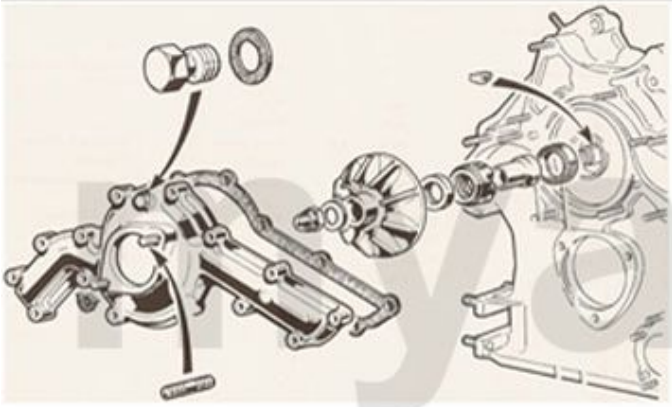



1	*2626450*	*REPAIR KIT WATERPUMP MONTREAL*	*€227.23*

Motorkühler/Radiator Montreal

1. 261 645 0

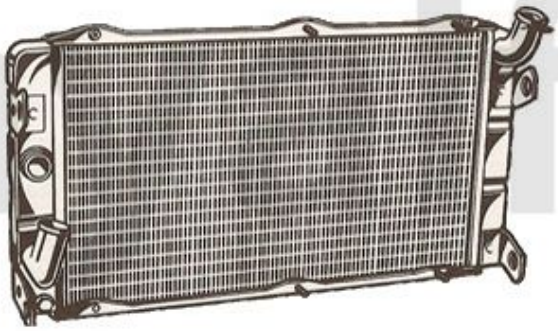

1	2616450	RADIATOR MONTREAL EXCHANGE	On request
1	2650260	Radiator Expansion Tank Montreal	€125.21

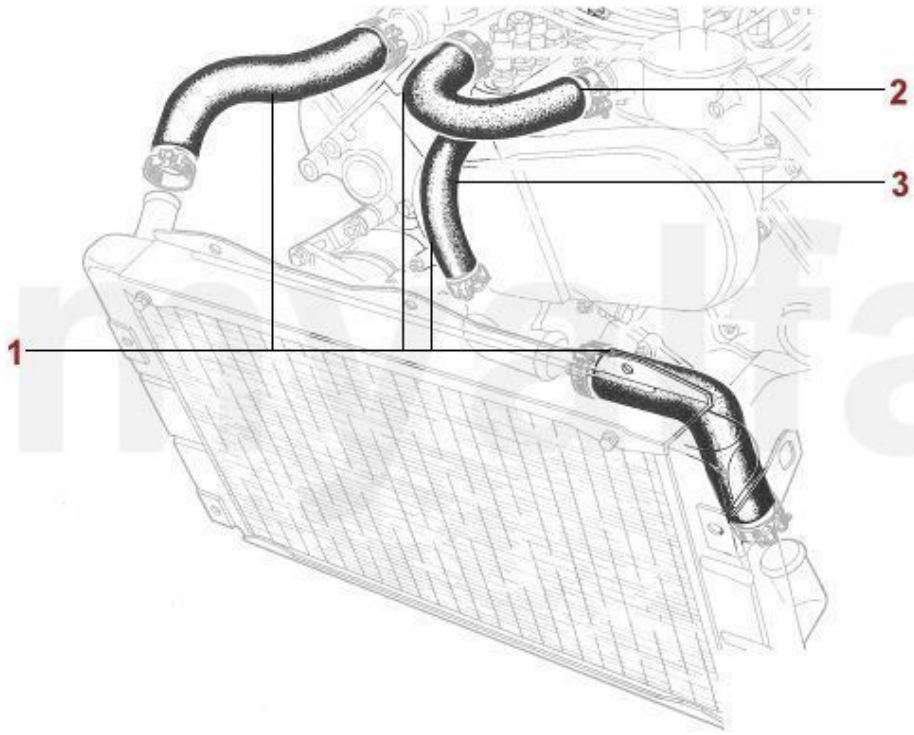

1	2660730	SET (4pc) COOLANT HOSES MONTREAL	€116.81
2	26615761	RADIATOR HOSE MONTREAL CYLINDER HEAD BYPASS	On request
3	26615764	RADIATOR HOSE WATER PUMP CYLINDER HEAD MONTREAL	On request

Kraftstoffförderung/Fuel System Montreal



1	2537020	FUEL PUMP SET MONTREAL	On request
2	2569450	FUEL PRESSURE REGULATOR MONTREAL	€125.97
3	2936450	OIL FILTER INJECTION PUMP SPICA MONTREAL	€33.53
4	2936460	FUEL FILTER Tank MONTREAL	€39.16
5	2936470	FUEL FILTER MONTREAL	€28.49
6	8650180	RUBBER GASKET SEAL FUEL FILTER TANK MONTREAL	€15.88
7	25370001	FUEL PUMP MONTREAL	On request
8	2521350	BALL SOCKET/JOINT HEAD MONTREAL, REGULATING LINKAGE INJECTION PUMP	€7.73
9	25340210	FUEL INJECTION PUMP MONTREAL	On request
10	2537040	FUEL PIPE SET AT FUEL PUMPS - MONTREAL	€171.43

Motorlager/Enginemount Montreal

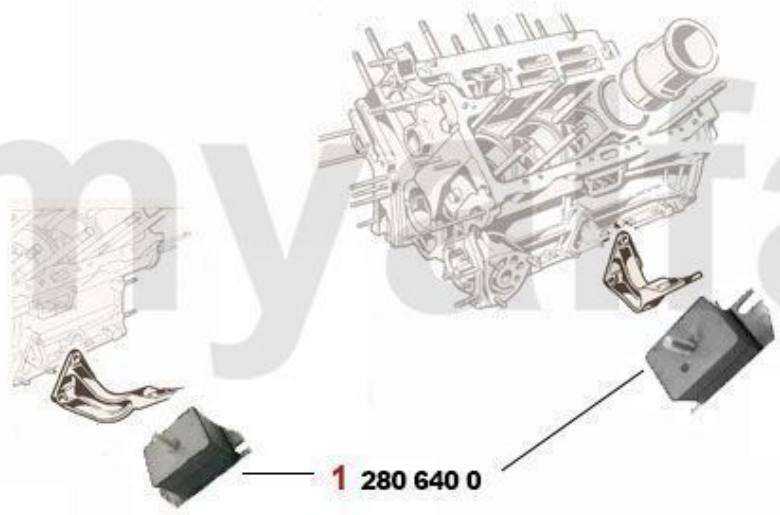

1	***2806400***	***SET ENGINE MOUNTS MONTREAL***	***€150.42***

Ventilsteuerung/Valve Gear Montreal

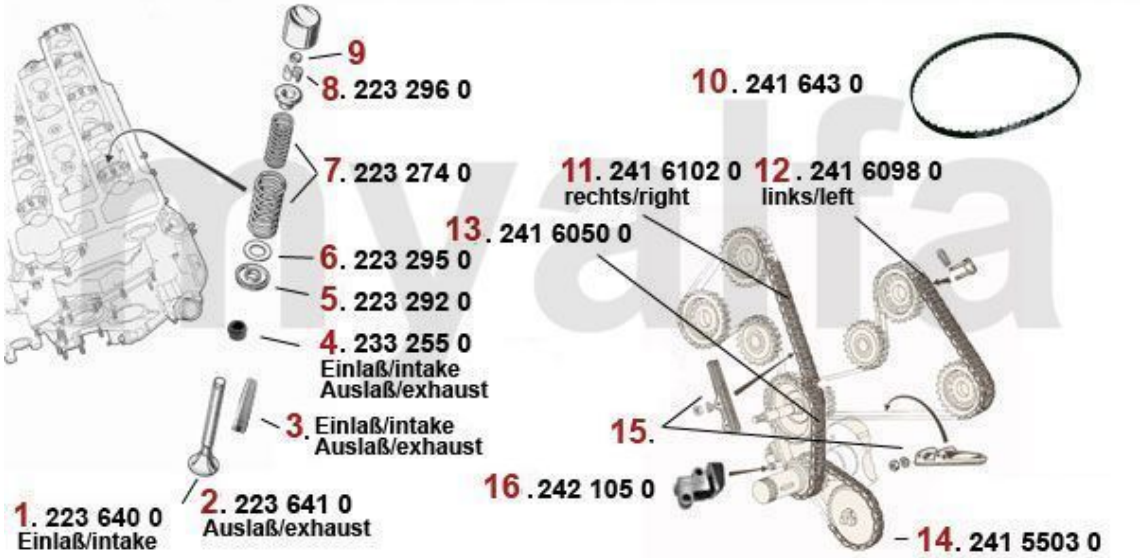

1	2236400	INTAKE VALVE MONTREAL 37 mm	€27.65
2	2236410	EXHAUST VALVE MONTREAL 33 mm	€27.65
3	2230400	VALVE GUIDE INTAKE STANDARD 9 x 14,05 x 51	€8.82
3	2231600	VALVE GUIDE INTAKE OVERSIZE 0.10 9 x 14,10 x 51	€11.68
3	2231610	VALVE GUIDE INTAKE OVERSIZE 0.20 9 x 14,15 x 51	€11.68
3	2230420	VALVE GUIDE EXHAUST STANDARD 9 x 14,05 x 54	€9.16
3	2231620	VALVE GUIDE EXHAUST OVERSIZE 0.10 9 x 14,10 x 54	€12.52
4	2332550	VALVE SEAL REINZ	€4.12
5	2232920	VALVE SPRING CUP	On request
6	2232950	SHIM VALVE CUP / SPRING	€2.98
7	2232740	SET VALVE SPRINGS 16 PIECES	€75.55
8	2232960	VALVE COTTER 9MM	€1.60
9	2431140	SET VALVE SHIMS 200 PIECES 2,525 - 3,5 mm, DIAMETER 9mm	€469.75
9	2430840	SET VALVE SHIMS 205 PIECES 1,5 - 2,5 mm, DIAMETER 9mm	€469.75
9	2430430	VALVE SHIM 9MM PLEASE SUBMIT THE SIZE YOU NEED	€10.42
10	2416430	TIMING BELT INJECTION PUMP MONTREAL	€41.93
11	24161020	TIMING CHAIN MONTREAL RIGHT IWIS	€83.61
12	24160980	TIMING CHAIN MONTREAL LEFT IWIS	€75.21
13	24160500	TIMING CHAIN MONTREAL SHORT IWIS	€57.56
14	24155030	TIMING CHAIN OIL PUMP MONTREAL IWIS	€50.34
15	2426470	SET SLIDE RAILS MONTREAL, LEFT OR RIGHT	€250.42
16	2421050	LOWER CHAIN TENSIONER 2600 / 105/115 / Montreal	€45.38
17	2240680	CAM FOLLOWER OE-QUALITY 101/105/115/116/75/155/164	€16.39
17	2240710	CAM FOLLOWER DLC RACING MADE IN ITALY 101/105/115/116/75/164	€36.89

Kolben/Lager-Pistons/Bearings Montreal

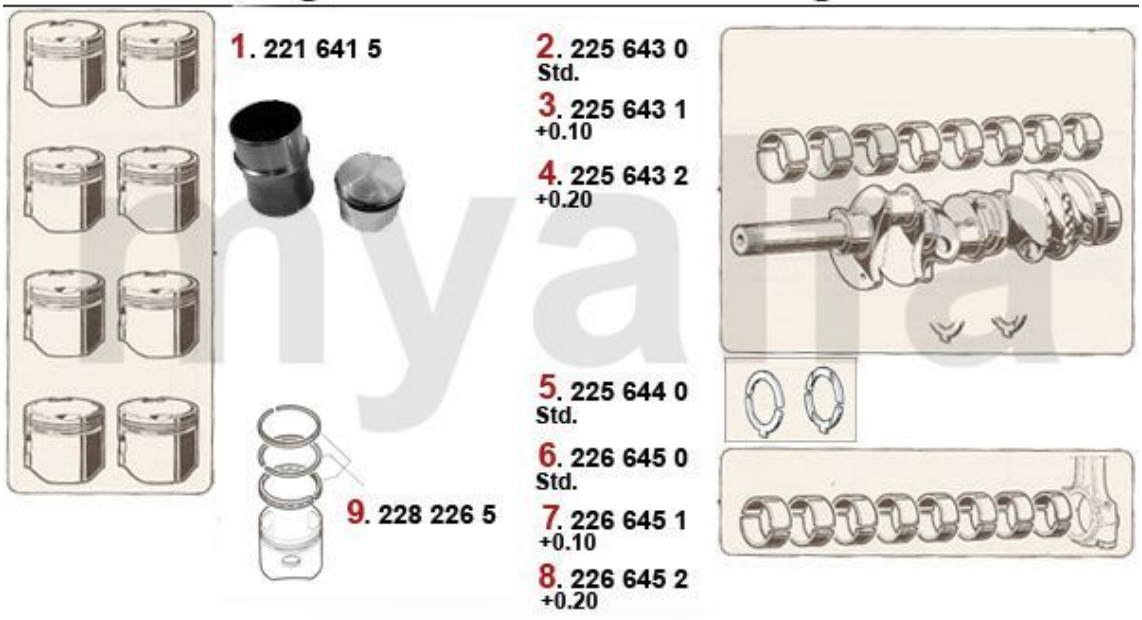

2	2256430	MAIN BEARINGS MONTREAL STANDARD	€343.70
2	2256431	MAIN BEARINGS MONTREAL +0,10	€343.70
2	2256432	MAIN BEARINGS MONTREAL +0,20	€343.70
2	2256433	MAIN BEARINGS MONTREAL +0,30	€402.52
2	2256434	MAIN BEARINGS MONTREAL +0,40	€402.52
3	2256440	SET THRUST WASHERS STD MONTREAL	€166.38
4	2266450	BIG END BEARINGS MONTREAL STANDARD	€293.28
4	2266451	BIG END BEARINGS MONTREAL +0,10	€293.28
4	2266452	BIG END BEARINGS MONTREAL +0,20	€318.49
4	2266453	BIG END BEARIINGS MONTREAL +0,30	€318.49
4	2266454	BIG END BEARIINGS MONTREAL +0,40	€386.47
5	2282265	SET PISTON RINGS MONTREAL (FOR 1 PISTON)	€32.77

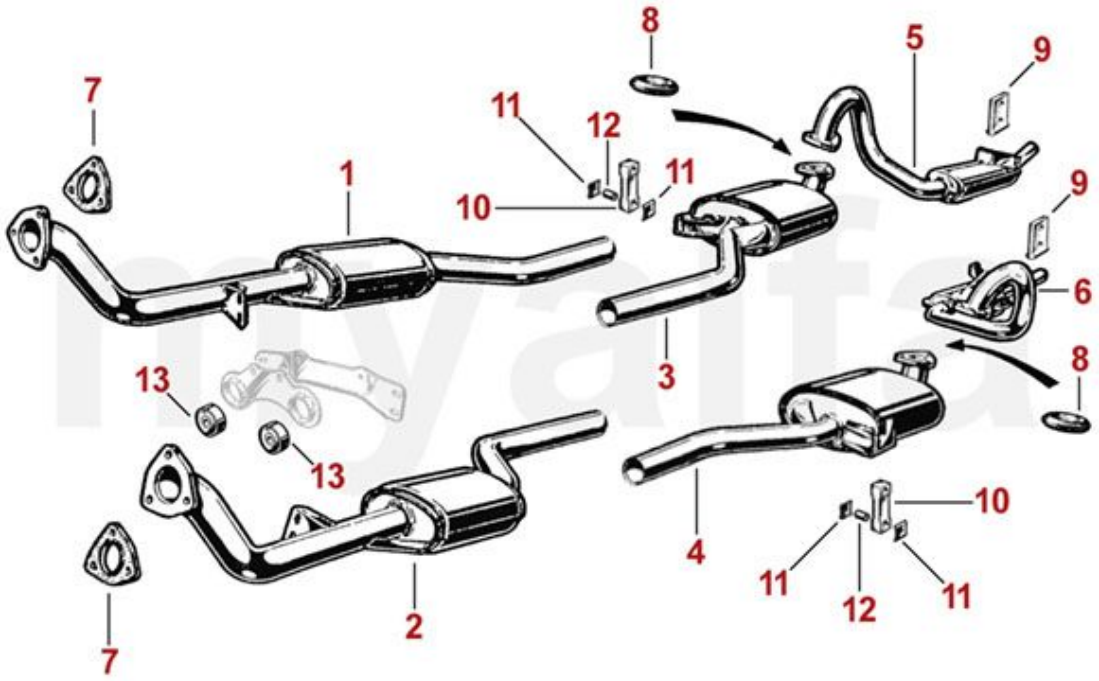

1	33207803	FRONT EXHAUST SECTION MONTREAL RIGHT	€284.87
2	33207813	FRONT EXHAUST SECTION MONTREAL LEFT	€284.87
3	34107806	MIDDLE EXHAUST SECTION MONTREAL RIGHT	€318.49
4	34107816	MIDDLE EXHAUST SECTION MONTREAL LEFT	€318.49
5	35107807	REAR EXHAUST SECTION MONTREAL RIGHT	€251.68
6	35107817	REAR EXHAUST SECTION MONTREAL LEFT	€251.68
7	38094407	GASKET EXHAUST MANIFOLD / FRONT EXHAUST SECTION MONTREAL	€7.14
8	38094047	O-RING REAR EXHAUST SECTION MONTREAL	€10.84
9	3800240	EXHAUST RUBBER MOUNT GTV6/MONTREAL REAR SECTION	€6.30
10	3800260	EXHAUST RUBBER HANGER	€4.20
11	3800510	EXHAUST HANGER RUBBER WASHER	€9.16
12	3800500	SET JACKET EXHAUST HANGER RUBBERS (2PC)	€4.86
13	3800280	GEARBOX EXHAUST HANGER BUSH	€7.98

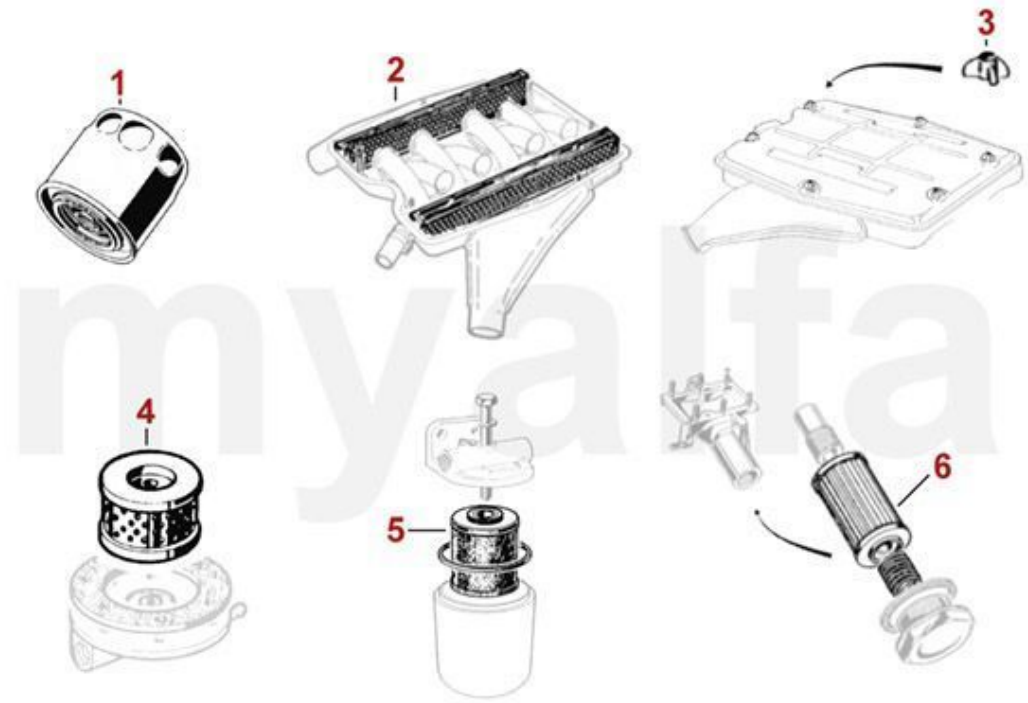

1	2910050	SPIN-ON STYLE OIL FILTER	€8.32
1	2910230	OILFILTER ORANGE - ORIGINAL RETRO DESIGN	€15.55
1	2910220	SPIN-ON STYLE OIL FILTER ORIGINAL Alfa Romeo	€13.87
2	2920310	SET AIR FILTERS MONTREAL	€74.79
3	2526450	SET WING NUTS FOR MONTREAL AIR FILTER HOUSING (6 PC)	€62.94
4	2936460	FUEL FILTER Tank MONTREAL	€39.16
5	2936470	FUEL FILTER MONTREAL	€28.49
6	2936450	OIL FILTER INJECTION PUMP SPICA MONTREAL	€33.53

Getriebe Anbauteile/Gear Mount Montreal

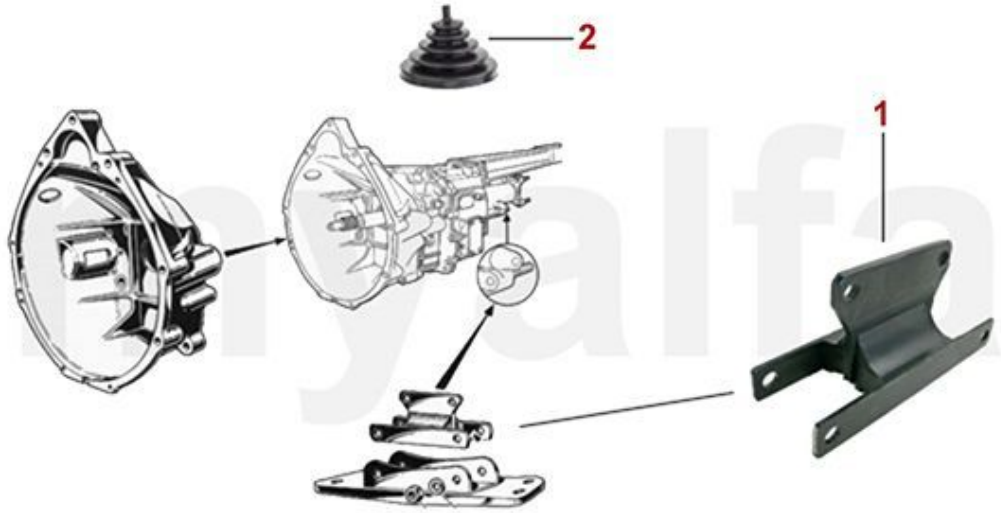

1	*4126410*	*REAR TRANSMISSION MOUNT MONTREAL*	*€193.19*
2	*4130080*	*GEARSTICK GAITER MONTREAL*	*€75.00*

Kupplung/Clutch Montreal



1	4344120	CLUTCH DISC MONTREAL	€201.60
1	4380240	CLUTCH SLAVE CYLINDER MONTREAL	€80.59
2	4332300	PRESSURE PLATE MONTREAL	€277.23
3	4350330	CLUTCH RELEASE BEARING HYDRAULIC FICHTEL & SACHS	€67.14

Kupplungsbetätigung/Clutch Actuation Montreal



0	*4380170*	*CLUTCH SLAVE CYLINDER 105/115 BENDITALIA*	*€83.95*
1	*4380230*	*CLUTCH CLYLINDER ALFA ROMEO MONTREAL 22mm*	*€164.62*
2	*4380140*	*CLUTCH SLAVE CYLINDER 105/115 OE-QUALITY*	*€57.98*
3	*4380210*	*CLUTCH RESERVOIRE WITH CAP HANGING PEDALS*	*€47.82*
4	*4380200*	*CAP BRAKE / CLUTCH RESERVIORE HANGING PEDALS*	*€11.34*

1	4410090	REAR PROPSHAFT SECTION "NEW" MONTREAL, 9MM HOLES, MADE IN ITALY, 765MM LENGTH	€331.93
10	4440020	UNIVERSAL JOINT MONTREAL	€48.70
15	4420060	FRONT DOUGHNUT COUPLING MONTREAL	€150.42
20	4430220	PROPSHAFT CENTRE SUPPORT 1968-93 HEAVY DUTY	€52.52
21	4430030	PROPSHAFT CENTRE SUPPORT BEARING ORIGINAL QUALITY	€13.36
21	4430010	PROPSHAFT CENTER SUPPORT BEARING FAG	€21.85
22	4440120	RETAINING CLIP PROPSHAFT CENTRE SUPPORT BEARING	€2.52

Differential Montreal

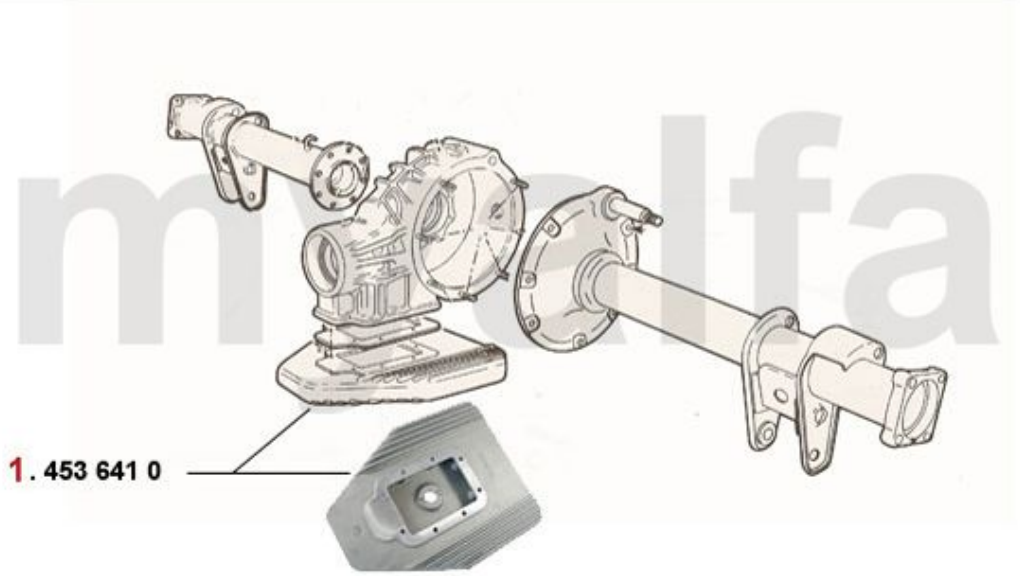

1	5441560	WHEEL BEARING KIT REAR 1972-93 WITH SHRINK RING	€54.54
1	5441570	SKF WHEEL BEARING SET 1972-93	€96.64
2	2330280	OIL SEAL WHEEL BEARING REAR 1300-2000 1972-93 52/34/10	€7.98
3	4530510	DIFFERENTIAL CASE BEARING 2000	€37.14
4	2331110	OIL SEAL DIFFERENTIAL MONTREAL	€23.45
5	4541930	TAB WASHER AXLE PIPE DOUBLE	€4.96
6	4541840	TAB WASHER DIFFERENTIAL SINGLE	€2.44
7	4541940	TAB WASHER DIFFERENTIAL DOUBLE (SET 3 PCS)	€12.52
8	2330330	DIFFERENTIAL OIL PAN GASKET 2000	€6.93
9	4536410	DIFFERENTIAL SUMP MONTREAL / GTA AUTODELTA	€457.98
10	2280110	SUMP PLUG WITH MAGNET TRANSMISSION/DIFFERENTAL 750/101, 105/115	€11.68
11	2330060	SUMP PLUG WASHER SUMP / TRANSMISSION / DIFFERENTIAL	€1.34
12	2280100	OIL FILLER SCREW , HEXAGON SOCKET, TRANS MISSION/DIFFERENTIAL M22x1.5	€6.64
13	4536440	STOP RUBBER DIFFERENTIAL / BODY 105/115	€12.52

Federn/Springs Montreal



1	5156410	SPORT FRONT SPRING EIBACH BERLINA / MONTREAL (30MM LOWER)	€104.20
2	5180160	RUBBER SEAT FRONT SPRING UPPER / LOWER	€7.98
3	5180170	METAL SEAT FRONT SPRING UPPER / LOWER	€7.98
4	5180180	FRONT SPRING SPACER ALUMINIUM 6 mm	€23.53
5	5180131	SPRING PAN LEFT SHALLOW 1986-93	€41.18
6	5180132	FRONT SPRING PAN DEEP RIGHT 1986-93	€41.18
7	5180140	UPPER RUBBER SEAT REAR SPRING	€8.32
8	5156420	REAR SPRING EIBACH MONTREAL (30MM LOWER)	€103.28

Stoßdämpfer/Shock Absorber Montreal



1	5120050	SHOCK ABSORBER FRONT BILSTEIN GAS PRESSURE	€121.85
2	5120030	SHOCK ABSORBER FRONT KONI RED ADJUSTABLE	€121.85
3	5121490	SHOCK ABSORBER FRONT KONI YELLOW ADJUSTABLE	€113.45
4	5120060	SHOCK ABSORBER REAR BILSTEIN GAS PRESSURE	€125.21
5	5120040	SHOCK ABSORBER REAR KONI RED ADJUSTABLE	€125.21
6	5121500	SHOCK ABSORBER REAR KONI YELLOW ADJUSTABLE	€116.81

Aufhängung vorne/Attachment front Montreal

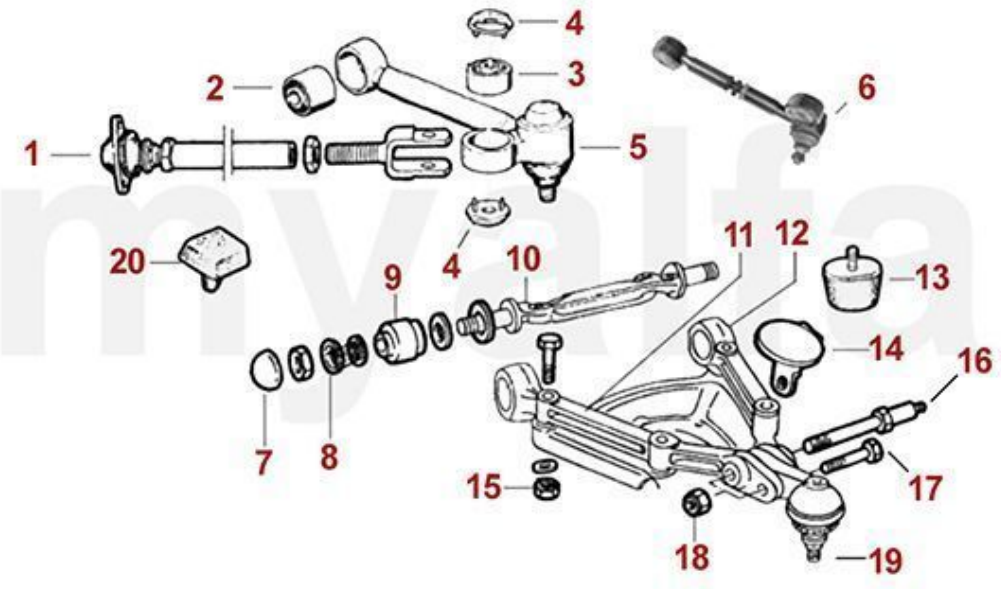

1	5340220	CASTOR ARM BALL JOINT	€28.49
2	5350200	TOP ARM INNER BUSH	€10.00
3	5340210	CASTOR ARM BUSH 23 mm HIGH	€9.75
4	5350460	SPACER (SET) FOR CASTOR ARM BUSH 19mm	€6.64
5	5330191	TOP SUSPENSION ARM LEFT WITH BUSHINGS WITHOUT CAP CASTOR ARM BUSH	€90.76
5	5330192	TOP SUSPENSION ARM RIGHT WITH BUSHINGS WITHOUT CAP CASTOR ARM BUSH	€90.76
6	5331650	SET ADJUSTABLE TOP ARMS WITH BUSHINGS WITHOUT CASTOR ARM BUSH	On request
6	5331651	ADJUSTABLE TOP ARM LEFT WITH BUSHINGS WITHOUT CAP CASTOR ARM BUSH	€132.77
6	5331652	ADJUSTABLE TOP ARM RIGHT WITH BUSHINGS WITHOUT CAP CASTOR ARM BUSH	€132.77
7	5190680	WISHBONE BUSH END CAP	€5.80
8	5191150	TAB WASHER BOTTOM WISHBONE BUSH	€4.12
9	5350240	BOTTOM WISHBONE BUSH	€37.48
10	5331120	WISHBONE USED	On request
11	5331170	FRONT WISHBONE ARM USED	On request
12	5331180	REAR WISHBONE ARM USED	On request
13	5190580	LOWER BUMP STOP FRONT WITH BOLT	€14.20
14	5521191	BUMP STOP PLATE LEFT	On request
14	5521192	BUMP STOP PLATE RIGHT	On request
15	5191210	NUT SPRING PAN SCREW	€1.68
16	5191220	BOLT SHOCK ABSORBER 105 / 115 / MONTREAL	€18.07
17	2280170	SCREW BALL JOINT HIGH STRENGH	€5.46
18	5191240	SAFETY NUT BOTTOM BALL JOINT	On request
19	5330230	BOTTOM BALL JOINT	€30.17
20	5190260	UPPER BUMP STOP 1969-93	€7.48

Aufhängung hinten /Attachment rear Montreal

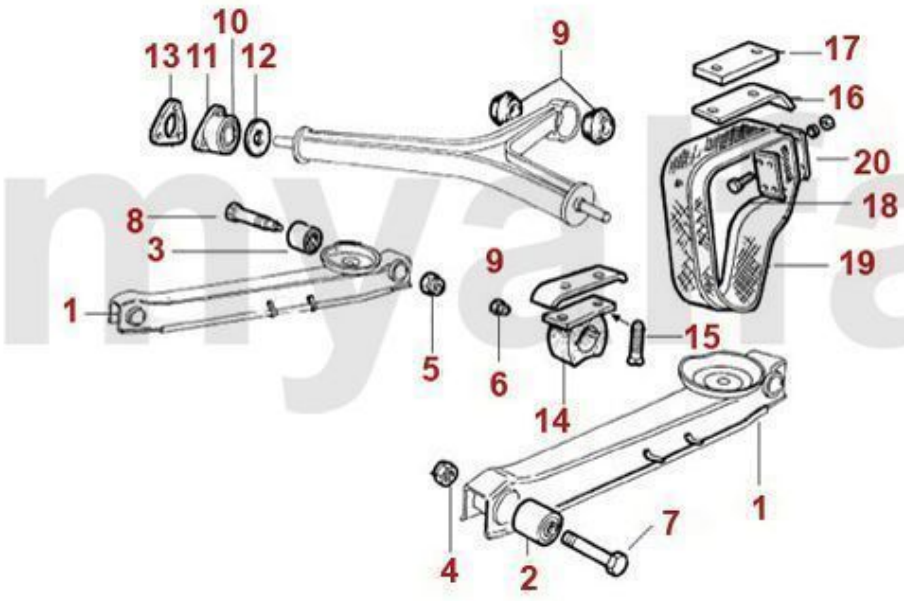

1	5320310	REAR TRAILING ARM 1968-93, WITHOUT BUSHINGS	€91.60
2	5341090	FRONT TRAILING ARM BUSH 1968-93, DIAMETER 50 mm HEAVY DUTY	€21.60
3	5341100	REAR TRAILING ARM BUSH 1962-93, HEAVY DUTY	€21.60
4	5190650	SAFETY NUT FRONT SCREW TRAILING ARM	€3.28
5	5350660	BIG SAFETY NUT FOR TRAILING ARM BOLT	€3.61
6	5350670	SMALL SAFETY NUT FOR TRAILING ARM BOLT	€1.39
7	5190910	FRONT SCREW TRAILING ARM	€5.80
8	5350920	BOLT FOR REAR OF TRAILING ARM	€18.07
9	5351460	T-BAR CONICAL BUSH HEAVY DUTY	€6.68
10	5350551	T-BAR END BUSH	€25.13
11	5350552	T-BAR END BUSH HOUSING	€32.77
12	5350970	T-BAR END RUBBER WASHER RUBBER	€5.00
13	5351860	T-BAR SPACER 2 mm	On request
14	5190270	UPPER BUMP STOP REAR AXLE VERSION FOR 31mm REBOUND STRAP	€12.52
15	5190590	SCREW REAR UPPER BUMP STOP	€2.02
16	5190540	REBOUND STRAP GUIDE PANEL UNDER UPPER BUMP STOP REAR AXLE TWO BENDED ENDS	€10.84
17	5190870	Bump Stop Spacer	€34.37
18	4540361	OUTER REBOUND STRAP REAR 31 mm	€10.84
19	4540362	INNER REBOUND STRAP REAR 31 mm	€10.84
20	5190530	FITTING KIT FOR ONE REBOUND STRAP 31 mm	€10.84

Stabilisator vorne/Stabilizer front Montreal

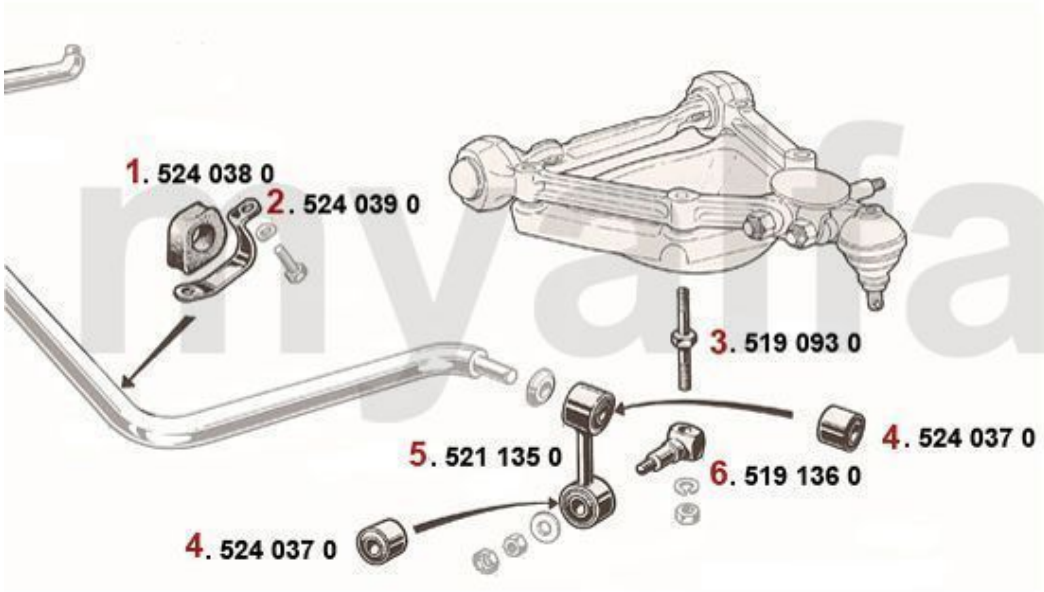

1	5240380	ANTI-ROLL BAR RUBBER FRONT SET (2) 105, 102 20000, 106 2600	€10.84
2	5240390	BRACKET FRONT ANTI ROLL BAR RUBBER	€7.35
3	5190930	BOLT SPRING (HIGH-STRENGTH STEEL) PAN / DROP LINK 1969-86	€22.65
4	5240370	FRONT UPPER ANTI ROLL BAR DROP LINK BUSH 30 mm	€8.32
5	5211350	FRONT ANTI ROLL BAR DROP LINK WITH BUSHINGS 1968-86	€23.95
6	5191360	SPRING PAN TO DROP LINK BOLT 1968-86	€20.08

Stabilisator hinten/Stabilizer rear Montreal

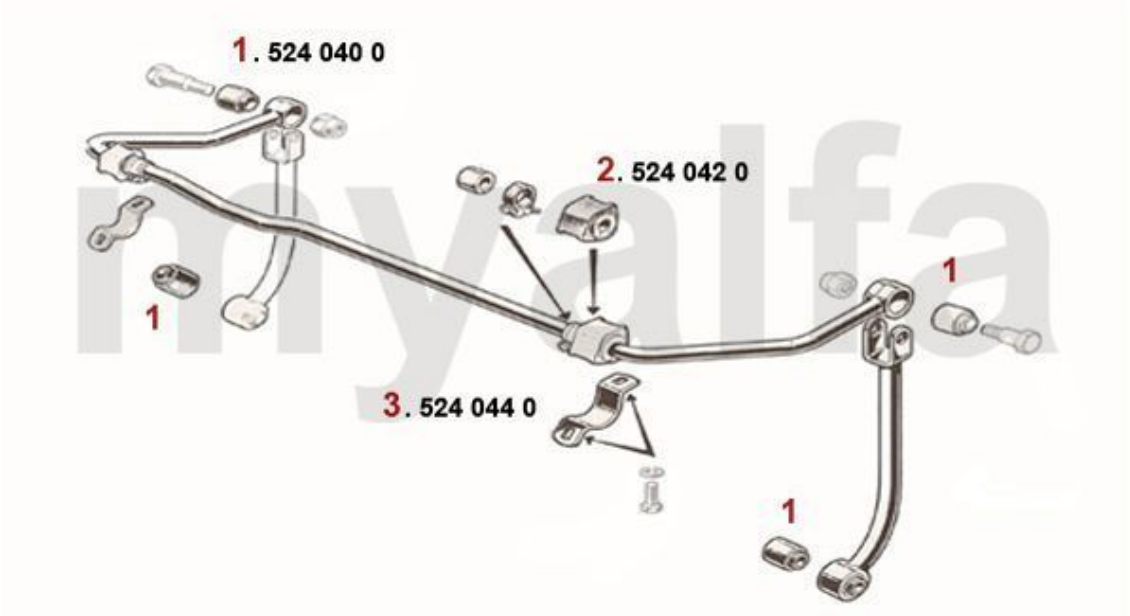

1	5240400	REAR DROP LINK LOWER BUSH	€9.08
2	5340110	SET ANTI-ROLL BAR RUBBER REAR MONTREAL, GIULIA, GTV, SPIDER	€33.61
3	5240440	BRACKET REAR ANTI ROLL BAR REAR	€11.68

Radlagersatz/Wheel Bearing Set Montreal

vorne/front:



hinten/rear:



1	5440280	WHEEL BEARING KIT FRONT	€45.29
1	5440200	INNER WHEEL BEARING SKF -1900/750/101/105/115	€18.91
2	5441550	WHEEL BEARING KIT REAR 1964-72WITH TAB WASHER	€58.32
2	5441560	WHEEL BEARING KIT REAR 1972-93 WITH SHRINK RING	€54.54
2	5441571	WHEEL BEARING REAR - 1900 / 101 1600 /105/115 RACING	€87.90



1	5722690	ALUMINIUM WHEEL MONTREAL 6.5x14 ET25 MADE IN ITALY , SERIES 1	€259.66
2	5722670	ALUMINIUM WHEEL MONTREAL 7,5x14 ET10 MADE IN ITALY , SERIES 2	€251.26
3	1362410	BADGE ALUMINIUM WHEEL SILVER / BLACK BACKGROUND 48 mm	€6.64
4	1360500	BADGE ALUMINIUM WHEEL BLACK / SILVER BACKGROUND 48 mm	€6.64
5	1360510	CIRCLIP BADGE ALUMINIUM WHEEL 48 mm	€3.11
6	5740942	WHEEL NUT ALUMINIUM WHEEL HIGH GLOSS CHROMED, RIGHT HAND THREAD	€3.27
6	5740941	WHEEL NUT ALUMINIUM WHEEL HIGH GLOSS CHROMED, LEFT HAND THREAD	€3.27
7	5741710	LOCK SET ALUMINIUM WHEEL RIGHT HAND THREAD	€33.53

Bremsscheiben/Brakediscs Montreal

vorne/front:

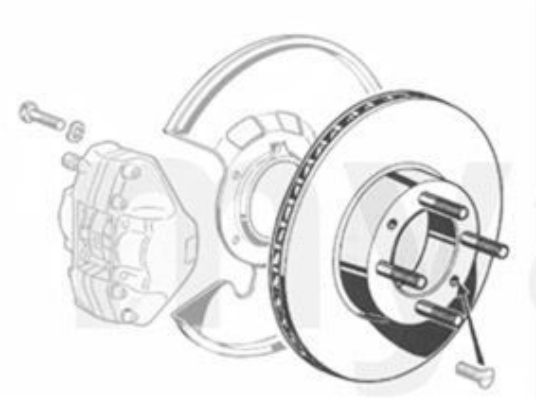

1. 610 645 0

hinten/rear:

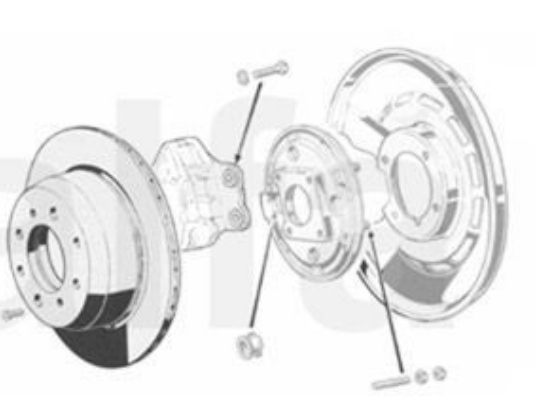

2. 610 646 0

1	*6106450*	*BRAKE DISC MONTREAL FRONT ohne Radbolzen*	*€222.69*
2	*6106460*	*BRAKE DISC MONTREAL REAR*	*€293.28*

Bremsssattel/Caliper Montreal vorne/front

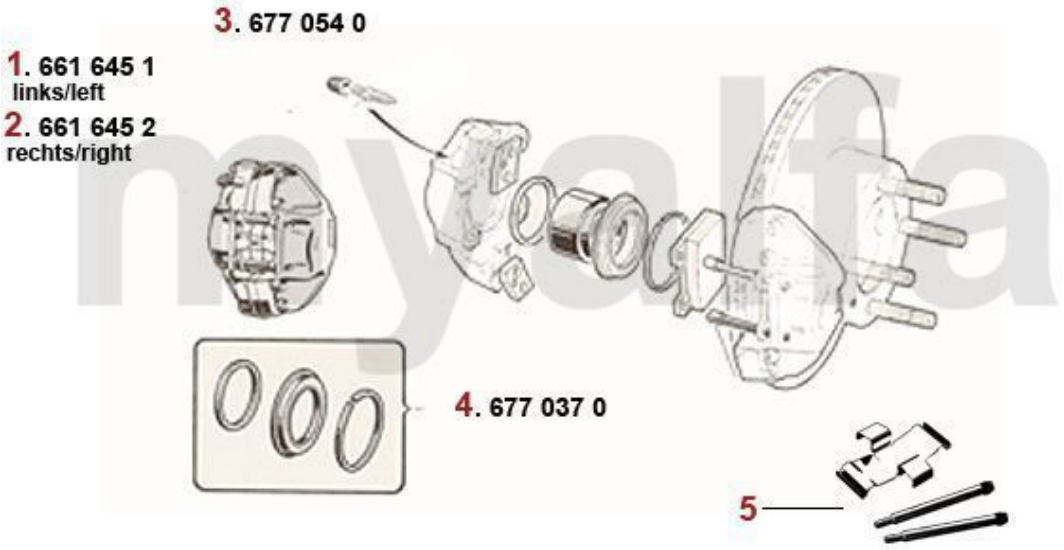

1	6616451	BRAKE CALIPER MONTREAL FRONT NEW LEFT	€200.84
2	6616452	BRAKE CALIPER MONTREAL FRONT NEW RIGHT	€200.84
3	6770540	CAP BLEEDER SCREW	€1.30
4	6770370	BRAKE CALIPER REBUILD KIT FRONT ATE	€18.99
5	6500100	RETAINING PIN FOR FRONT BRAKE PAD MONTREAL	€16.39

Bremssattel/Caliper Montreal hinten/rear

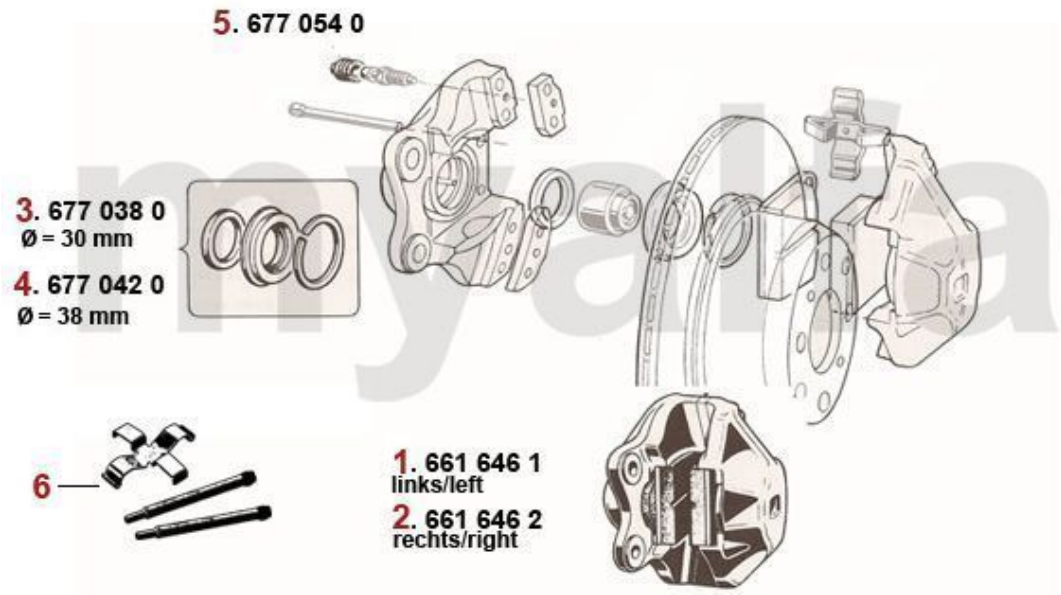

1	6616461	BRAKE CALIPER MONTREAL REAR LEFT	€180.04
2	6616462	BRAKE CALIPER MONTREAL REAR RIGHT	€180.04
3	6770380	BRAKE CALIPER REBUILD KIT 1964-66 ATE (30 mm), PREMIUM	€49.58
4	6770420	BRAKE CALIPER REBUILD KIT 1967-93 REAR ATE, 38mm PISTONS	€20.00
5	6770540	CAP BLEEDER SCREW	€1.30
6	6500200	RETAINING PIN SET FOR REAR BRAKE PADS MONTREAL	€16.39

Bremsbeläge/Brake Pads Montreal

vorne/front:

1. 630 005 F
Ferodo std.

2. 630 098 0
Ferodo Racing DS2500

3. 630 089 0
Ferodo Racing DS3000

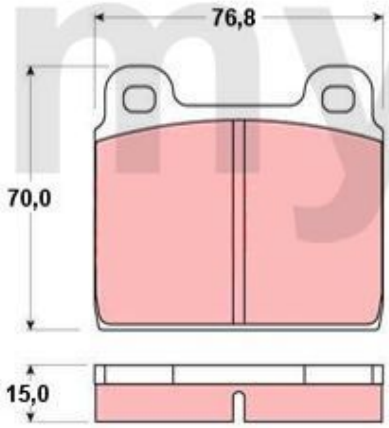

hinten/rear:

4. 630 006 F
Ferodo std.

5. 630 099 0
Ferodo Racing DS2500

6. 630 090 0
Ferodo Racing DS3000

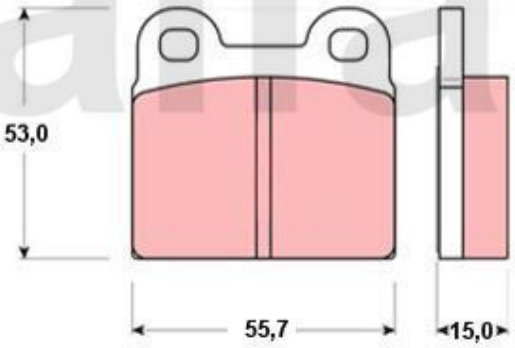

1	*630005F*	*BRAKE PADS 1750/2000, 1600 1986-93 FRONT, OEM QUALITY*	*€33.19*
2	*6300980*	*BRAKE PADS 1750/2000, 1600 1986-93 FRONT FERODO RACING DS2500*	*€138.66*
3	*6300890*	*BRAKE PADS 1750/2000, 1600 1986-93 FRONT FERODO RACING DS3000*	*€142.02*
4	*630006F*	*BRAKE PADS 1300-2000 1966-93 REAR, OEM QUALITY*	*€30.67*
5	*6300990*	*BRAKE PADS 1300-2000 REAR FERODO RACING DS2500*	*€121.85*
6	*6300900*	*BRAKE PADS 1300-2000 REAR FERODO RACING DS3000*	*€120.92*

myalfa

BKV/Hauptbremszylinder/Brakeservo/Brake master cylinder Montreal

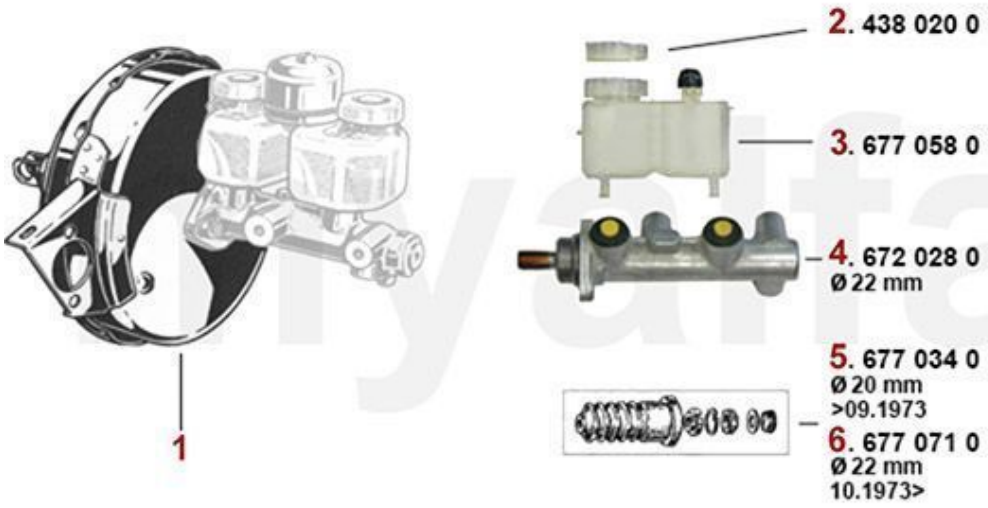

1	6710250	BRAKE BOOSTER 1300-2000 SYSTEM ATE, HANGING PEDALS	€197.48
1	6710260	BRAKE BOOSTER 1300-2000 SYSTEM ATE, HANGING PEDALS BENDITALIA ORIGINAL	€294.03
2	4380200	CAP BRAKE / CLUTCH RESERVIORE HANGING PEDALS	€11.34
3	6770580	BRAKE FLUID RESERVOIR HANGING PEDALS	On request
4	6720280	BRAKE MASTER CYLINDER HANGING PEDALS 20,6MM	€105.80
5	6770340	REPAIR KIT BMC 1300-2000 HANGING PEDALS ATE 20 mm	€46.22
6	6770710	REPAIR KIT HBZ 1300-2000 HANGING PEDALS ATE VERSION 22 mm	€18.74

Bremsschläuche/Bremskraftregler/Brakehose/Brakevalve Montreal

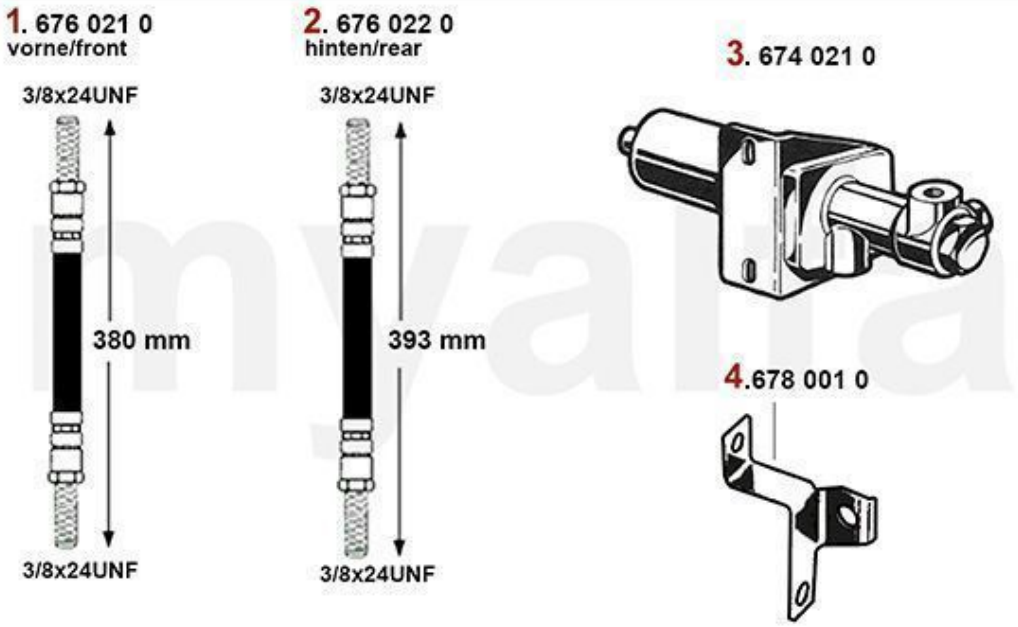

1	6760210	BRAKE HOSE FRONT 750/101/105/106/ MONTREAL	€16.64
2	6760220	BRAKE HOSE REAR 750/101/105/ MONTREAL	€18.40
3	6740210	BRAKE PRESSURE REG. TYPE ATE GIULIA, GT BERTONE, SPIDER 1. SERIES, MONTREAL	€188.99
4	6780010	SET (2) FRONT BRAKE LINE BRACKET	€35.80

Handbremse/Handbrake Montreal

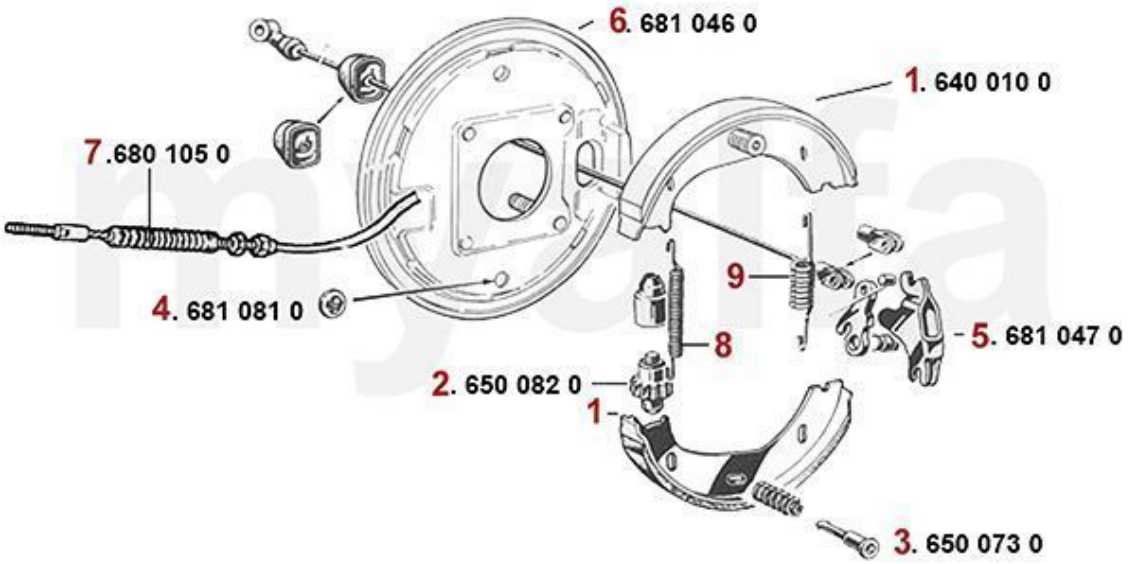

1	6400100	SET BRAKE SHOES 4 PIECES	€33.19
2	6500820	HANDBRAKE ADJUSTOR	€33.19
3	6500730	HANDBRAKE SHOE RETAINING PIN	€3.95
4	6810810	COUNTERPLATE FOR RETAINING PIN	€7.48
5	6810470	HANDBRAKE SHOE OPERATOR LEVER	€28.57
6	6810460	REAR BRAKE ANCHOR PLATE	On request
7	6801050	MAIN HANDBRAKE CABLE MONTREAL	€50.00
8	6500840	HANDBRAKE SHOE SPRING LONG	€5.42
9	6500850	HANDBRAKE SHOE SPRING SHORT	€3.95
10	6800170	HAND BRAKE CABLE SET (2PC) REAR LEFT AND RIGHT - 105 MONTREAL	€41.18

Motorzündung/Ignition Montreal



1	8146450	SET IGNITION MODULES MONTREAL WITH IGNITION COIL	On request
2	8156450	POINTS MARELLI 4 SPRINGS SHORT CABLE	€91.60
3	816100	ROTOR MONTREAL / FERRARI 308	€165.46
3	8171440	DISTRIBUTOR CAP MONTREAL / FERRARI 308	€209.24
4	8186450	HT LEADS MONTREAL	€147.06
5	BA2HL	SPARK PLUG "myalfa" 2HL	€7.48
5	BP7ES	OE. 60512929 SPARK PLUG NGK BP7ES	€4.12
6	8186430	SET HAT LEAD CLAMPS MONTREAL	€66.39
7	8151500	CONDENSER MARELLI MONTREAL / GTA / FERRARI	€15.55

Aggregate/Aggregats Montreal



1	8226450	STARTER MOTOR MONTREAL EXCHANGE	On request
1	8216450	HIGH PERFORMANCE STARTER MOTOR - MONTREAL	€402.52
2	8216460	ALTERNATOR MONTREAL EXCHANGE 65A STD	€326.89
2	8216470	ALTERNATOR MONTREAL NEW 65A STANDARD	€483.19
2	8216480	ALTERNATOR MONTREAL NEW 100A STRENGTHENED	€578.99
3	8230700	EXTERNAL REGULATOR ALTERNATOR 12V	€27.31
3	8230710	EXTERNAL REGULATOR ALTERNATOR 12V HELLA	€33.19

Schalter/Switches Montreal



1	8414600	ELECTRIC WINDOW ROCKER SWITCH MONTREAL	€57.98
2	8413801	INTERIOR LIGHT ROCKER SWITCH MONTREAL	€49.58
3	8413400	HORN ROCKER SWITCH MONTREAL	€49.58
4	8410510	DASHLIGHT ROCKER SWITCH SPIDER 1970-80 / MONTREAL	€49.58
5	8410580	HEATER FAN ROCKER SWITCH SPIDER 1970-80, MONTREAL	€57.98
6	8410540	WINDSCREEN WIPER ROCKER SWITCH SPIDER 1970-80, MONTREAL	€57.98
7	8416450	COURTESY LIGHT SWITCH MONTREAL	€6.89
8	8436450	COLUMN SWITCH MONTREAL	€200.84
9	8110080	INGNITION SWITCH RIGHT SIDE OF STEERING WHEEL	€116.81

Geber/Sensor Montreal

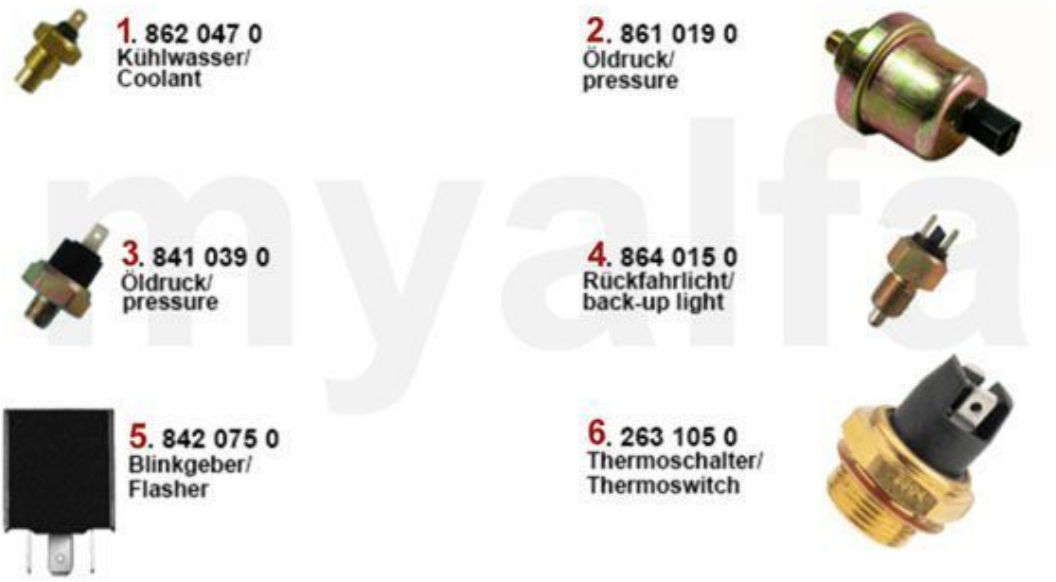

1	*8620470*	*WATER TEMPERATUR SENDER*	*€16.72*
2	*8610190*	*OIL PRESSURE SENDER JAEGER / VEGLIA SERIES 2*	*€40.25*
2	*8610180*	*OIL PRESSURE SENDER JAEGER 1st SERIES (SHORT VERSION)*	*€46.22*
3	*8410390*	*OIL PRESSURE SWITCH*	*€13.03*
4	*8640150*	*REVERS LIGHT SWITCH SCREW-IN*	*€15.88*
5	*8420750*	*INDICATOR/FLASHER PLASTIC RELAY 4 PIN*	*€18.40*
6	*2631050*	*THERMO SWITCH MONTREAL 88°/79° C*	*€20.59*

Installationsmaterial/Installation Material Montreal



1	8430960	HAZARD UPGRADE KIT 12V HELLA	€159.58
2	8701120	HORN SET LOW / HIGH	€39.41
3	87046010	ANTENNA STAINLESS STEEL	€15.04
4	9822250	BATTERY LIFE SAFER	€32.35
5	8421540	POWER RELAY	€15.04
6	1190190	ELECTRIC WINDOW MOTOR SPIDER 1990-93 / MONTREAL / ALFETTA GTV	€108.40



1	1570080	INDICATOR LAMP FOR INDICATOR (ONE ARROW)	€18.49
2	1570010	INDICATOR LAMP FOR INDICATOR	€18.49
3	1570020	INDICATOR LAMP RED, BRAKE	€18.49
4	1570030	INICATOR LAMP GREEN FOR DIMMED HEADLIGHTS	€18.49
5	1570040	INDICATOR LIGHT BLUE FOR FULL BEAM	€18.49
6	1570050	INDICATOR LAMP YELLOW FOR FOG LAMP	On request
7	1570060	CLAMP FOR DASHBOARD LAMP	€1.26

0	*8701290*	*WIRING HARNESS MONTREAL*	*€1,327.65*

Lenkung/Steering Montreal

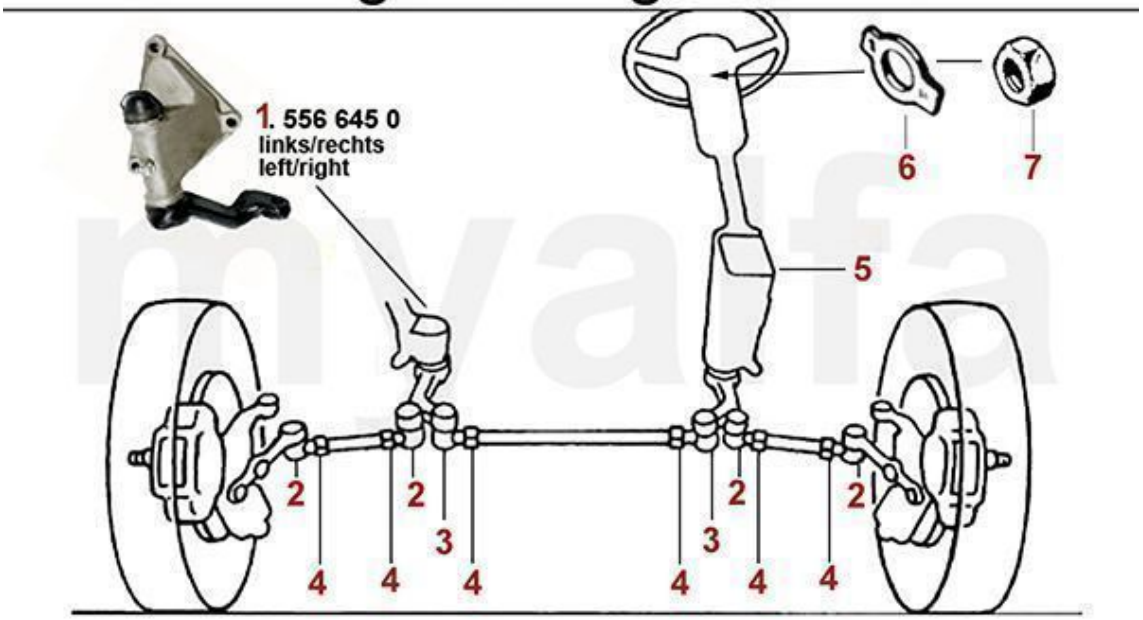

1	5566450	IDLER ARM MONTREAL EXCHANGE / SURCHARGE 300 EURO	€310.08
2	5540331	OUTER TRACK ROD END LEFT HAND THREAD LEMFÖRDER	On request
2	5540332	OUTER TRACK ROD END RIGHT HAND THREAD LEMFÖRDER	On request
3	5540181	INNER TRACK ROD END LEFT HAND THREAD LEMFÖRDER	On request
3	5540182	INNER TRACK ROD END RIGHT HAND THREAD LEMFÖRDER	On request
4	5540111	COUNTER NUT TRACK ROD LEFT HAND THREAD	€2.10
4	5540112	COUNTER NUT TRACK ROD RIGHT HAND THREAD	€2.10
5	5511050	STEERING BOX CASING BURMAN MONTREAL	€617.65
6	1770310	LOCKING TAB STEERING WHEEL UNTIL 1985	€4.12
7	1770320	NUT STEERING WHEEL - 1900, 750/101, 102/106, 105/ 115 UNTIL 1985	€14.71

Scheibenwaschanlage/Wipers

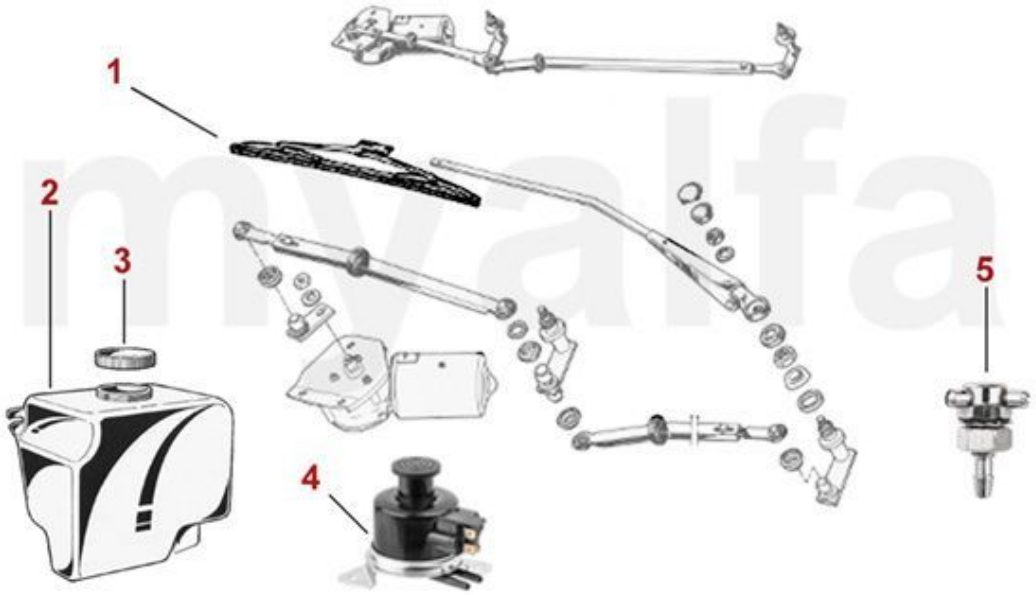

1	8830010	SET WIPER BLADES MONTREAL STAINLESS STEEL	€50.34
2	8810010	WIPER WATER TANK MONTREAL	€138.57
3	8810020	LID FOR WIPER WATER TANK MONTREAL	€20.84
4	8810210	WINDSHIELD WASHER FOOT PUMP	€54.62
5	8800820	WASHER JET CHROME (2-JETS)	€10.84



1	*9811050*	*BATTAINI CAP FOR JACK TOP ALFA ROMEO 105 SERIES*	*€14.24*



*das Bild zeigt eine Stretchshell Decke in schwarz

1	9111180	CARCOVER MADE TO MEASURE ALFA ROMEO MONTREAL WITH BADGE, RED	€142.02
2	9116460	CAR COVER ALFA ROMEO MONTREAL, RED	€100.00
2	9116470	CAR COVER ALFA ROMEO MONTREAL, BLUE	€100.00
2	9116480	CAR COVER ALFA ROMEO MONTREAL, GREEN	€100.00
2	9116490	CAR COVER ALFA ROMEO MONTREAL, BLACK	€100.00

1	*9822260*	*BATTERY CHARGER AB-4 ABSAAR*	*€33.53*
2	*9822250*	*BATTERY LIFE SAFER*	*€32.35*
3	*8701130*	*BATTERY SWITCH / MASS POLE CLAMP*	*€8.32*

0	*9850040*	*FENDER PROTECTOR MYALFAGROUP*	*€33.53*